UNC ENERGY SERVICES

THE UNIVERSITY OF NORTH CAROLINA AT CHAPEL HILL

Chilled Water Design Specifications

Chilled Water Services

Table of Contents

DESCRIPTION OF CHILLED WATER SYSTEM

The University of North Carolina - Chapel Hill owns, maintains and operates a district cooling system comprised of 4 production plants and a thermal energy storage system, distribution system consisting of over 26 miles of underground piping, and building bridge systems consisting of over 150 bridges controlling chilled water in over 140 buildings or locations. The chilled water group also operates and maintains remote systems located outside the district cooling systems called standalone chillers. These are 16 chillers located at ten different sites.

The production plant capacities are:

Name	Number of chillers	Tons Capacity
North	10	17,150
South	7	13,500
Cobb	5	10,000
Tomkins	3	6,000
Marsico Hall (Imaging Research Building)*	1	600
Tomkins (Winter Operation)	2 Heat Exchangers	4,500
Thermal Energy Storage		40,000-ton hrs

* Cooling capacity is completely dependent upon available heat load

The remote systems include:

Name/Location	Number of chillers	Tons Capacity
Brooks Hall	1	50
Carolina Crossing	1	80
Family Physician's Center (Aycock Family Medicine)	1	165
Frank Porter Graham Child Development Center	1	80
General Administration	2	400
440 West Franklin	3	253
Friday Center	2	1,000
Facility Services Chilled Water Plant	2	394
Bingham Animal Facility	2	200
RDU (AHEC Hanger)	1	15

Chilled water is centrally produced and distributed throughout the campus, and this district cooling system shall be utilized wherever possible. The district cooling system is comprised of four major subsystems; the production system, the distribution system, the building bridge system, and the building cooling system. The Designer responsible for connecting to this system is primarily concerned with the last two subsystems.

NOTE: These specifications do not cover any of the requirements for the production facilities. Any specifications for these facilities are custom and handled on a per need basis.

BUILDING SYSTEM

The building system includes all chilled water piping in the building; the chilled water pump and all cooling coils, heat exchangers and other equipment using chilled water. The Designer must consider the following when designing the building chilled water systems.

The range of allowable elevation of chilled water piping in the building is a maximum of 565 feet above sea level and a minimum of 350 feet above sea level.

Designer must calculate chilled water static plus dynamic head for each project and determine if pressure limits of the chilled water system are exceeded. Buildings that require higher or lower elevations or higher heads must have plate and frame heat exchangers. Plate and frame heat exchangers must have the flow regulated on the primary (or supply) side of the heat exchanger by means of a properly sized control valve. The temperature sensor must be located on the secondary side of the heat exchanger in the leaving water line for controlling the chilled water supply temperature to the loads.

The cooling coils and heat exchangers must be designed for variable flow, constant temperature differential. At design conditions these units must have a return temperature of at least 59°F (60°F if a heat exchanger is used), but not more than 64°F, and not require a supply temperature of less than 45°F. The return temperature during low load conditions shall not drop below 55°F.

A bridge enable signal shall be provided from the BAS (Building Automation System). For details regarding the bridge enable signal, see **Building and EMCS Interface** on page 30.

Chilled water from this system shall not be used for any application where the temperature of the heat exchanger surface in contact with the chilled water exceeds 100°F.

The building pump must be selected for the building system head and flow requirements. A variable volume pump is recommended, particularly in buildings with large cooling loads.

The control valves and control systems on equipment served by the chilled water system must be capable of accurate low load control and close off across the building pump shutoff head.

Use of a separate bridge interface system for unusual or special cooling loads is required. An example of a special load is one that requires an elevated supply temperature, such as process equipment, or an essential load in a building with otherwise only non-essential AC loads, such as a computer room.

PRIMARY/SECONDARY BUILDING BRIDGE SYSTEM

By definition; the primary/secondary bridge connections exist when the primary circuit (distribution mains) is connected to the secondary circuit (building system) by means of a low-pressure loss pipe common to both circuits. The correct operation of the district cooling system is dependent on the design and operation of the primary/secondary bridge.

Factors that affect the operation of the primary/secondary bridge are described below:

Flow head loss in distribution mains from production plant to point of connection. This value varies primarily with changes in distribution system load.

Flow head loss in branch lines between the bridge and the mains. This value varies primarily with changes in building system load. Generally, the branch piping should be designed with a velocity of 3 to 6 FPS depending on actual length. When determining the flow in the pipe, consider what future loads may be imposed upon it. Use the following schedule to determine branch piping size: (length = total equivalent feet of supply + return runs).

GPM	LENGTH (ft)	PIPE SIZE
0-150	0-400	4”
150-250	0-200	4”
	200-1000	6”
250-600	0-250	6”
	250-1000	8”
600-1000	0-400	8”
	400-1000	10”
1000-1500	0-500	10”
	500-1000	12”
1500-2000	0-800	12”
	800-1200	14”
2000-4000	0-500	14”
	500-1000	16”

UNDERGROUND CHILLED WATER DISTRIBUTION PIPING

GENERAL

Use only new material, free from defects, rust, scale, and warrantied for services intended. Use material meeting the latest revision of the ASTM specifications as listed in this specification. Use only long radius elbows having a centerline radius of 1.5 diameter unless otherwise indicated. Unless otherwise indicated, fittings and accessories connected to the pipe shall be of the same material as the pipe.

Contractor Qualifications

The Engineer must approve the contractor performing the underground chilled water work. Submit contractor qualifications and references for five (5) similar projects performed in the last 5 years. The contractor must also meet the following minimum requirements:

Performed a minimum of three (3) underground ductile iron pipeline installations for 24" pipe and larger within the last 5 years.

Has been in the underground pipeline utility business and has been performing this type of work for a minimum of 5 years.

Is licensed to perform work in the State of North Carolina.

Submittals (Copies to Chilled Water Engineer)

Submit shop drawings for all pipe sizes including, but not limited to, the following:

1) Pipe: ASTM/ANSI/AWWA number, grade if known, class, type, wall thickness, material.
2) Fittings: ASTM/ANSI/AWWA number, grade if known, class, type, wall thickness, material.
3) Flanges: ASTM number, grade, class, type, material.
4) Valves: Manufacturer, type, model number, materials of construction, manufacturer's data sheet (clearly cross-referenced).
5) Isometric drawings showing all piping installed with joints, fittings and thrust blocks, as required for installation.
6) Test Pressure and media.
7) Pipe cleaning method

Record Documentation

Prior to acceptance of installation and use, contractor shall deliver two (2) copies of survey quality as built construction drawings for UNC to review and approve. Drawing to include GIS survey of points including change of directions, valves & tie in locations. A photograph library of the installation prior to backfilling is required. Photographs should include changes in direction, thrust block installation, pipe restraints and other pertinent information. The photographs must include background landmarks to verify location, orientation and physical attributes of the installation.

Product Delivery, Storage and Handling

Furnish all pipes with plastic end-caps/plugs on each end of pipe. Maintain end-caps/plugs through shipping, storage and handling to prevent pipe end damage and eliminate dirt and construction debris from accumulating inside the pipe.

PIPE MATERIALS

Ductile Iron Pipe

The pipe and fittings shall be suitable for a minimum working pressure of 300psi, ANSI C151/A21.51, with asphalt coating and cement mortar lining ANSI/AWWA C104/A21.4. Nominal piping wall thickness shall be as follows:

Piping Diameter (in)	Wall Thickness (in)
4 – 8	0.25
10	0.26
12	0.28
14	0.30
16	0.32
18	0.34
20	0.36
24	0.40
30	0.45
36	0.51

Fittings shall be ductile iron mechanical joint type manufactured in accordance with ANSI/AWWA C110/A21-10, rated for 250psi working pressure. Straight pipe joints and fittings are to be restrained joint-type. Joints and fittings shall be flexible and shall be designed to provide positive restraint against end-wise separation due to thrust.

Piping shall be US Pipe TR-Flex® or American Cast Iron Pipe Flex Ring® or approved equal. American Cast Iron Pipe Fastite® joint or US Pipe Tyton™ joint with EBBA Iron Series 1100 for new piping or Series 1700 harness type restraints may be provided for existing piping. All joints must be restrained for permanent piping. Pressure rating of 250psi minimum.

All bolts shall be low alloy, high strength steel bolts having minimum yield strength of 45,000psi and which are cathodic to the pipe, meeting requirements of AWWA C111.

Restrained type joint fittings shall be equal to EBBA Iron Series 1100 Megalug® restraint systems for mechanical joint ductile iron piping, fittings and valves. Series 1100 solid ring restraints shall have a rated working pressure of 350psi up to 16” pipe and 250psi for 18” to 36” pipe. Series 1100 split ring restrains shall have a rated working pressure of 300psi up to 16” and 200psi for 18” to 36” pipe. Gasket material shall be SBR.

When piping is installed and to be left unattended or overnight, installation of non-pressure pipe plugs is required, or permanent plugs must be installed. Non-pressure plugs shall be equal to Taylor Made Plastics Bell End or Spigot End Plugs. The plugs shall be polyethylene with gaskets designed to keep pipes clean.

HDPE PIPE

HDPE pipe will be considered for some applications and installations, but only with the written approval of the Chilled Water Director and the Chilled Water Distribution System Supervisor. If HDPE is allowed, it must meet the specifications below:

A. The carrier pipe and fittings shall be a PE3408 High Density Polyethylene (HDPE) pipe and comply with the requirements of ASTM D1248, ASTM 3350, AWWA C901 (2" through 3"). AWWA C906 (4" through 63"), and NSF Standards 14 and 61. Materials used in the manufacture of HDPE pipe and fittings shall have the following minimum physical properties:

Property	Test Method	Value
Cell Classification	ASTM D3350	345434C
Density	ASTM D1505	0.955 gm/cc
Flexural Modulus	ASTM D790	136,000 psi
Tensile Strength @ Yield	ASTM D638	3,500 psi
Elastic Modulus	ASTM D638	125,000 psi
Brittleness Temperature	ASTM D746	< -180 °F
Melting Point	ASTM D789	260° F
Hardness	ASTM D2240	Shore D 64
Impact Strength (IZOD)	ASTM D256	42 in.-lb/in.

B. The outside diameter and minimum wall thickness shall be manufactured to Ductile Iron Pipe sizes and have a Standard Dimension Ratio (SDR) of 11 and a pressure rating of 160psi (Class 160).

C. All fittings shall be pressure rated to match the system piping to which they are joined. At the point of fusion, the outside diameter and minimum wall thickness of the fitting shall meet the outside diameter and minimum wall thickness specification of AWWA C901/C906 for the same size pipe. All fittings shall be properly rated and clearly labeled. The fitting manufacturer shall be the same as the pipe manufacturer. Molded fitting shall be made from P3408 and have fusion capability with the pipe. Fitting shall meet the requirements of the ASTM D3261 for the butt-type fittings.

D. Pipe and fittings shall be joined by thermal butt fusion, flange assemblies or mechanical methods in accordance with the manufacturer's recommendations and the requirements of AWWA C901/C906. The HDPE pipe supplier shall provide the fusion equipment necessary for connecting the pipe and fittings. All butt fusions shall be done by McElroy fusion equipment or approved equal.

E. Pipe and fittings shall be marked with the manufacturer, date of manufacture, lot lot number, size, PE code, pressure class, SDR#, AWWA designation number, and other information as described in AWWA C901/C906.

VALVES

Butterfly Valves

Installation Note: To facilitate testing of the installed piping, all valves should be tested above ground and in both directions prior to installation of the valve. This will remove the valve from consideration if leakage occurs during the pressure test.

Valves to be designed for direct buried application shall conform to latest revision of AWWA C504 in addition to the requirements listed below.

Valves shall be rated for AWWA C504 Class 250B, 250psi non-shock working pressure-minimum. Valves are to be bubble-tight at the rated pressure in either direction. They shall be suitable for throttling service and operation after long periods of inactivity. Valves must be hydrostatic, and leak tested in accordance with AWWA C504.

Ductile iron body ASTM A536, restrained mechanical joint (AWWA C111/ANSI 21.11) ends. Valves shall be furnished complete with all required MJ joint accessories (bolts, nuts, gaskets and glands).

Valve discs shall be constructed of cast iron ASTM A126, Class B, or ductile iron ASTM A536. Disc shall have ASTM A276-Type 316 continuous stainless-steel seating edge to mate with valve seat.

Valve shaft to be corrosion resistant, ASTM A276-Type 304; ASTM A276-Type 316; ASTM A564 Grade 65-45-12 or approved equal.

Resilient seat shall be natural rubber (BUNA-N). Seat shall be bonded or mechanically retained in the valve body only. The seat shall be capable of mechanical adjustment and/or replacement in the field.

Valve assembly shall be furnished with a non-adjustable, factory set, thrust-bearing, and centered to the valve disc at all times. Shaft bearings shall be contained in the integral hubs of the valve body, be self-lubricated sleeve type and be sealed in place with self-adjusting packing.

Valves to be complete with grease packed buried service gear operator in compliance with latest revision of AWWA C504. Actuator shall have adjustable open and closed mechanical position stops that can withstand input torque of 450 ft-lbs. Orient valve operator to the outside of the trench or pipe (see Appendix D). Operator shall include shaft extensions to within one foot of finished grade, centering disc(s) located on shaft extensions, and all required soil pipes. Refer to drawings for length of shaft extensions and soil pipes.

Approved Manufacturers: DeZurik, Pratt, or approved equal.

Valve Boxes

Valve boxes shall be 2 – piece cast iron, screw type, 5.25” shaft with stay-put heavy-duty traffic weight lid marked “CHILLED WATER”. Boxes shall be equal to figure UTL 273, as manufactured by Charlotte Pipe and Foundry Co., Dewey Brothers or Tyler.

Valve boxes to be coated with coal tar for direct buried service application.

Vent Valve Boxes

Vent valve boxes shall be 2-piece cast iron, 12-inch diameter box with a cover with a highway H20 rating. Boxes shall be located directly above the installed corporation stop. Mark cover as “Chilled Water”.

Tapping Sleeves

NOTE: Tapping sleeves can be used only if approved by Chilled Water Director.

Tapping sleeves shall be manufactured from Type 304 stainless steel plate with a stainless-steel ring flange, compatible with ANSI Class 125 and 150 bolt circles. The body and outlet shall be chemically passivated after welding for maximum corrosion resistance. The side bars shall be heavy gauge stainless steel. Trackhead bolts shall be 304 stainless steel with heavy nuts with UNC thread. Nuts shall be coated to prevent galling. Tapping sleeve shall be Romac STS420, no exceptions allowed.

Flange shall be stainless steel class "D" plate flange, with proper recessing for tapping valves. Flange will accommodate tapping flanges per MSS SP-60.

Gaskets for the flange and outlet sealing gaskets shall be Styrene Butadiene Rubber (SBR) compounded for water and sewer in accordance with ASTM D2000.

Gate Valves (For Tapping Service Only)

Conform to latest version of the AWWA Standard C-509 for resilient seated gate valves. There shall be a non-rising stem. The stem shall be cast bronze. The stem stuffing box shall be the O-ring seal type with two rings located above the thrust collar. The valve shall have a smooth full diameter waterway with no recesses.

The valve body and wedge shall be cast iron or ductile iron and shall be coated inside and outside with epoxy. The epoxy coating must meet or exceed AWWA C-550. The valve shall be designed for a pressure rating of 200psig and shall be hydrostatically tested at 400psig. The wedge must be completely encapsulated with rubber. Operator shall include shaft extensions to within 1' of finished grade, centering disc(s) located on shaft extensions, and all required soil pipes. Refer to drawings for length of shaft extensions and soil pipes.

Approved Manufacturers: US Pipe, Clow or approved equal.

INSTALLATION

DESIGN & INSTALLATION NOTE: If installation is to connect to existing piping and that piping is unrestrained, a thrust block must be designed and installed before excavation can begin to install the new piping. See details for design requirements of thrust block.

When digging within 10 feet of chilled water piping and the piping is unrestrained:

Locate chilled water pipes.

If the centerline of the chilled water lines and the proposed utility are less than 8 feet apart and any part of the proposed utility is below the top of the chilled water pipe, install the utility as follows:

Locate both chilled water lines and the proposed utility, excavate joints one at a time and install split ring Megalug® restraints.

When the restraints have been installed, backfill and compact to 90%. Backfill to original grade.

Install proposed utility section and proceed to next unrestrained joint. If required, all the restraint work can be completed before any of the proposed work is started.

All pipe, valves and fittings shall be installed as indicated on the drawings and according to the manufacturer's instructions and UNC Chilled Water details.

Provide a concrete stabilizing pad under all isolation valves that are 20" or greater. (See Standard Details - Appendix D).

Provide vents at all high points of pipe sections. Contractor shall make taps at these high points and install corporation cocks and vent piping to grade before testing. During the backfill of the piping, the contractor will ensure vent lines are installed per the vent detail directly above installed piping. (See Standard Details - Appendix F).

Provide a stabilizing concrete pad around all valve boxes (see Standard Details - Appendix D). Do not locate valve boxes in parking spaces or in other inaccessible locations unless approved by Chilled Water Engineer. Install utility marking tape labeled 'Chilled Water' 2 feet above each pipe installed.

CLEANING AND FLUSHING OF UNDERGROUND PIPING

Chilled Water (4" to 42")

Contractor shall visually inspect internal portion of each length of pipe during installation. Remove all dirt and foreign matter prior to installing additional lengths.

After each major section of piping has been installed, it shall be cleaned and flushed utilizing a high-pressure water "hydro-jet" process. The hydro-jet process involves passing a high pressure, high volume spray type cleaning head through the piping. The head is inserted in each section of piping and activated with full water pressure and flow. Through hydraulic force from directional spray nozzles the head propels itself forward up the pipe section. Once the head reaches the end of the pipe section it is retracted while maintaining maximum water pressure and flow. The length of the piping section shall be determined ahead of time so that the proper amount of travel can be tracked with calibrated markings on the spray head feed water hose or a meter on the hose reel. While traveling through the piping the pressurized water spray knocks debris loose and carries it back to the open end of the piping where it is collected and removed from the system. For each section of piping the process shall be performed a minimum of two times and may need to be repeated until the water exiting the end of the pipe is clear and free of debris as determined by the Owner/Engineer.

The hydro-jet equipment utilized shall be capable of providing a minimum of 50 GPM at 2000psi. All cleaning and flushing shall be performed so that all debris will be pulled or flushed downhill. All cleaning and flushing shall be initiated from all low points in the system and shall terminate at the nearest adjacent high point in the system.

Coordinate the limitations and requirements of hydro-jet process with the flushing subcontractor such that the piping is installed in a sequence and manner that allows every section of the new pipeline to be cleaned and flushed. Limitations may include maximum length of the pipe section, maximum number and/or degree of bends in the pipe section, maximum slope of the pipe section, equipment and excavation access requirements, and the minimum size of the openings required in the piping to allow for insertion and retraction of the cleaning head.

Contractor shall provide access at all low points through valves, tees, flanges, etc. to facilitate the cleaning and flushing process. If temporary fittings or piping are required, they shall be provided by the Contractor and removed by the Contractor after successful cleaning.

After flushing and cleaning is completed, contractor shall provide necessary pipe and fittings required to complete the piping system. Each cleaned section of piping shall be capped and protected to keep mud, debris, water, etc. from entering the piping. If a piping section is left open or unprotected, or is contaminated, it shall be re-cleaned prior to being filled and activated at no cost to the Owner.

Contractor shall provide all water for flushing and testing. Coordinate rental of fire hydrant meters with local Fire Department(s), or the University as required.

Contractor shall provide all temporary piping from water source to piping system and shall provide means for conducting cleaning water from underground piping system to the appropriate sewer; i.e. pumps, piping, hoses, tanks, etc. Contractor to remove all temporary piping, pumps, hoses, etc. from site immediately after flushing has been completed.

Testing

The chilled water piping shall be leakage rate tested. Leakage rate test shall be conducted at the same time as the hydrostatic pressure test. Leakage rate is defined as the quantity of water that must be supplied into the respective underground piping system to maintain the pressure within 5psig of the specified hydrostatic test pressure after air in piping system has been removed and piping system has been filled with water. The test pressure shall be 180psig at the highest point of the piping being tested.

The pressure tests shall be sustained for not less than four hours and or long as the Chilled Water Engineer/Representative requires assuring that:

The scale of the test gauge must be a minimum of 50psi higher than the anticipated test pressure and the incremental reading of the gauge is 2psi.

No air pockets are in the line.

No broken pipe or defective materials are in the line.

No leaking joints have been made. Any visible leak, drip, or weeping from a joint or fitting, or pipe will cause an automatic failure of the test. The issue must be resolved, and then a new test will begin.

Before applying the specified test pressure, all air shall be expelled from the pipe. If outlets are not available at high points, the Contractor shall make the necessary taps at points of highest elevation, install corporation cocks, and vent piping to grade per the vent detail before the test is made.

Tests may be made of isolated portions of such piping as will facilitate general progress of the installation. Any revisions made in the piping systems will subsequently necessitate re-testing of such affected portions of the piping systems.

Any defective material or defects in workmanship that develop during the tests shall be remedied and the subject piping shall be re-tested.

Determine the maximum allowable amount of leakage by the following formula:

$$L = S * D \text{ SQRT } (P) / 200{,}000$$

L = allowable leakage in gallons per hour

S = length of pipe tested, in feet

D = nominal diameter of pipe in inches

P = average test pressure during leakage test in pounds per square inch

The Contractor is required to furnish all pumps, gauges, instruments, test equipment, and personnel required for tests and make provisions for removal of test equipment and draining of pipes after tests have been made. All testing shall be made in the presence of the Engineer. The allowable leak rate is acceptable only when an approved meter is used, approved by the Chilled Water Engineer and applies only to testing single lines.

Maximum Allowable Leakage Rate							
(Test Pressure 180psig)(Gallons per hour)							
Pipe Size	**Length of Pipe (Feet)**						
	100	**150**	**200**	**300**	**500**	**700**	**1000**
4	0.03	0.04	0.05	0.08	0.13	0.19	0.27
6	0.04	0.06	0.08	0.12	0.20	0.28	0.40
8	0.05	0.08	0.11	0.16	0.27	0.38	0.54
10	0.07	0.10	0.13	0.20	0.34	0.47	0.67
12	0.08	0.12	0.16	0.24	0.40	0.56	0.80
14	0.09	0.14	0.19	0.28	0.47	0.66	0.94
16	0.11	0.16	0.21	0.32	0.54	0.75	1.07
20	0.13	0.20	0.27	0.40	0.67	0.94	1.34
24	0.16	0.24	0.32	0.48	0.80	1.13	1.61
30	0.20	0.30	0.40	0.60	1.01	1.41	2.01
36	0.24	0.36	0.48	0.72	1.21	1.69	2.41

CHILLED WATER BRIDGE

GENERAL

A specification of an item in this or any other sections shall not relieve Contractor from providing all items, articles, materials, operations, methods, labor, equipment and incidentals necessary for a complete and functional system.

Where size for a pipe segment is not indicated, the pipe segment size shall be equal to the largest pipe segment to which it is connected. Transition to smaller size shall occur on the side of fitting where smaller size is indicated.

All pipe, valves, fittings and pumps shall be installed as indicated on the drawings and according to the manufacturer's instructions and installation drawings. All welding shall be performed to meet ASTM B31.1 unless noted by designer as otherwise.

General Locations and Arrangements Drawings (plans, details, schematics, and diagrams) indicate the general location and arrangement of the piping systems. Location and arrangement of piping layout shall take into consideration pipe sizing, friction loss, pump sizing, maintenance accessibility and other design considerations. So far as possible, install piping as indicated.

Design Note: *Design of the bridge piping shall place bridge inside mechanical room and install bridge controller cabinet, all instruments, valves and meter between building isolation and utility isolation valves, excluding the end of line differential pressure transmitter.*

Contractor Qualifications

The Engineer must approve the contractor performing building piping work. Submit contractor qualifications and references for five (5) similar projects performed in the last 5 years. The contractor must also meet the following minimum requirements:

Performed a minimum of three (3) institutional building piping installations within the last 5 years.

Has been in the institutional building piping business and has been performing this type of work for a minimum of 5 years.

Is licensed to perform work in the State of North Carolina.

Submittals (Copies to Chilled Water Engineer)

Submit shop drawings for all pipe sizes including, but not limited to, the following:

1) Pipe: ASTM/ANSI number, grade if known, class, type, wall thickness, material.
2) Fittings: ASTM/ANSI number, grade if known, class, type, wall thickness, material.
3) Flanges: ASTM number, grade, class, type, material.
4) Isometric drawings showing routing, sensor location, valve location and hanger locations.
5) Test Pressure and media.
6) Pipe cleaning method.
7) Valves: manufacturer cut sheets, size, materials, actuator size, pressure rating.
8) Pumps: manufacturer cut sheets, pump curves, including design capacity and head, motor cut sheets, pump base design, pump installation requirements, pump manufacturer's alignment specifications, flexible coupling design and cut sheet.
9) Welder certifications.
10) Thermometer: manufacturer cut sheet, size, range.

Product Delivery, Storage and Handling

Before shipping, all carbon steel piping shall be free of rust, scale, and furnished with plastic end caps/plugs on each end of pipe. Protect flanges, fittings, and specialties from moisture and dirt by inside storage and enclosure, or by packing with durable waterproof wrapping.

Store and handle all materials in accordance with Manufacturer's recommendations to prevent their deterioration and damage. Store all materials in the original containers or bundles with labels informing about manufacturer, product name, and any potential damage.

Where possible, store all materials inside and protect from weather. Where necessary to store outside, elevate well above grade and enclose with durable, waterproof wrapping. When stored inside, do not exceed the structural capacity of the floor.

BRIDGE COMPONENTS

Meters

Install mag meter, supplied by the University, as per flow diagram and manufacturer installation requirements. The preferred meter installation is in horizontal pipe runs. For a meter being installed in same size bridge piping, there shall be a minimum of five (5) pipe diameters *before* the meter and two (2) pipe diameters *after* the meter. If installing smaller meter than the bridge piping or any fittings adjacent to the meter, have four (4) pipe diameters between the meter flanges and the reducers or fittings on both sides of the meter. For horizontal installation, the probes inside the meter must be installed in the three o'clock and nine o'clock positions, with the control read-out on the top at the 12 o'clock position. *The meter must not be installed downstream from the control valve. The meter must not be installed in the highest point of pipe system*.

Valves

Control Valves:
Information for (TCV-A) Return Temperature Control Valve (page 30)
Alternate (TCV-A) Return Temperature Control Valve (page 30)

Manual Utility and Building Isolation Valves:
Use high performance butterfly valves. The valve shall have a lugged wafer style body of carbon steel or ductile iron rated for ANSI class 150 service. The seat material shall be fluoropolymer-based blend with no fillers, nor PTFE filled. Disk and shaft shall be 316 Stainless Steel construction. Shaft shall be full-length. Stub shafts are NOT allowed. Disk to shaft connection shall be non-shear tangential pinning. Disk shall be offset from the shaft centerline. The valve shall have upper and lower shaft bushing/bearings of a 316 stainless steel carrier and PTFE liner. Shaft seal shall be multiple rings of V-flex style PTFE packing with 316 stainless steel packing-ring.
Approved Manufacturers: Jamesbury, Milwaukee, or approved equal

Pump Isolation Valve:
Valves shall be full lug type permitting removal of downstream piping while using valve for system shut-off. Bi-directional dead-end pressure rating to be a minimum of 150psig with no downstream flange/piping attached. Standard applications shall use 10-position lever operators for valve sizes 5” and smaller, gear operator for larger sizes.

Approved Manufacturers: Nibco, Apollo, Milwaukee, Jamesbury, or approved equal

Valve Installation:
Install butterfly valves as shown on plans, details and according to valve manufacturer’s installation recommendations.

Valves may be used to facilitate the fit-up of weld neck flanges, but the valve must be removed before the flanges are welded. During fit-up, metal pancakes or solid pieces of gasket material shall be used to ensure that valve is not damaged from sparks or spatter.

Valves with gear operators or actuators are to be installed with stems at or above centerline wherever possible, but in *no case* with the stems straight down. Valves with actuators and position indicators shall be installed so that the indicator is visible from the floor. Any valve installed with reducers nearby must have appropriate spacing to remove any bolt without pipe disassembly.

Before tightening flange bolts, adjust the disc of the valve to the full-open position. Tighten bolts to specification in crisscross pattern. After tightening, rotate disc to closed position to assure proper operation.

After piping systems have been pressure tested and put into service, but *before* final adjusting and balancing, inspect valves for leaks. Adjust, replace packing or replace valves to stop leaks.

Gear Operator:
Provide gear operator for manually operated butterfly valves 6” and larger.

Chain Wheel Operators:
Provide chain operators for manually operated butterfly valves 6” and larger, located more than 8 ft. above equipment room floor.

Cast iron or ductile iron adjustable sprocket rims and chain guides are required. Use galvanized or brass chain and chain closure links to form continuous loop of chain at each operator.

Ball Valves:

Ball valves for use in chilled water systems must have a performance rating of CWP 600psi with two (2) piece design. Provide valve neck extensions of sufficient length to allow for insulation. Three (3) piece valves are NOT allowed.

Approved Manufacturers: Apollo 70-100 series or approved equal

Check Valves:

Check valves used for Duplex pump system should be 150 Class Dual Disc Wafer Style. Check Valves for the Pump Bypass should be 150 Class flanged swing check.

PIPING

Piping Installation

Remove scale, slag, dirt, and debris from both inside and outside of piping and fittings before assembly. Install valves, control valves and piping specialties, including items furnished by others, as specified and/or detailed. Refer to drawings and/or manufacturer's recommendations. Use fittings for all changes in direction and all branch connections. Mitered ells, welded branch connections, notched tees and "orange peel" reducers are NOT allowed. Weld-o-lets® may be used in lieu of fittings for branch take-offs from mains 2" or larger *provided that the branch take-offs are two (2) or more sizes smaller than the main.* Do not use "stub-ins" for making pipe connections.

Thread-o-lets must be used at vent and drain connections, thermowells and/or other instrument locations. Materials of Weld-o-lets® and Thread-o-lets® shall match the material of the piping. All holes shall be made with a drill bit or hole saw. Holes may NOT be cut with a torch.

Reducers in horizontal piping shall be the *eccentric* type with the top level. Reducers in vertical piping shall be *concentric*. All reducers must be installed to allow bolt installation *and* removal after all equipment is in place.

Provide drain valves at all low points and vents at high points of piping systems (even if not shown on drawings) for complete drainage of systems. This includes, but is not limited to, all low points, bases of all risers, at each branch take-off and between isolation valves. See drain and vent sizing chart on page 19.

Piping Materials

Use only new materials, free from defects, rust, scale and guaranteed for services intended.

Pipe:

All Chilled Water piping lines shall be seamless, standard weight, Schedule 40 black steel ASTM A53 GR B. Chilled Water pipes larger than 2" shall have welded joints. Threaded nipples shall be Schedule 80 black steel.

Welded Fittings:

Pipe fittings shall be standard weight Schedule 40 black steel. Use only long radius elbows.

Flanges:

ASTM A105, ANSI B16.5, hot forged steel, weld neck pattern flanges are to be used whenever possible. Slip-on flanges are not allowed without Chilled Water Director's prior consent. Bore dimension of weld neck flange shall match inside diameter of connected pipe. Full face gaskets must be used with flat face flanges, and ring-

type gaskets must be used with raised face flanges. For example, pump connections and strainers. Valves may be used to facilitate the fit-up of flanges; but valves must be removed before the flanges are welded. During fit-up, metal pancakes or a solid piece of gasket material shall be used to ensure that the valve is not damaged from weld sparks or weld splatter while tacking flanges.

Bolts/Fasteners:

Bolts and nuts shall be Grade 5 NC. Bolts, bolt studs, nuts and washers shall have zinc/cadmium plate finish.
Note: Threaded rods are not allowed as fastening elements. If studs are to be used, they are to be individually factory stamped with grade identification.

Drains/Vents:

Provide drain valves at all low points and vents at high points of piping systems (**even if not shown on drawings**) for complete drainage and venting of systems between isolation valves and elsewhere as noted on flow diagram, plans and details. Where the vent lines cannot be reached from floor level, or be easily reached using an 8' ladder, the vent lines shall be run with a second isolation valve accessible from floor level and the discharge to be run to the sanitary sewer system.

Connections to the pipe shall be made using thread-o-lets and Schedule 80 nipples. For drains and vents, provide ball valves of type specified above and size specified below with hose thread adapter and cap.

Pipe Size	Drain Size	Vent Size
6" and less	Minimum ¾"	Minimum ½"
8" to 10"	Minimum 1"	Minimum ¾"
12" to 14"	Minimum 1¼"	Minimum ¾"
16" and greater	Minimum 2"	Minimum ¾"

INSTRUMENTATION

Thermometer/Temperature Sensors

Use ¾" Thread-o-lets® for the installation of temperature sensor and thermometer thermowells. Temperature sensors are to be installed on the sides of horizontal run piping. Position the outlet connection so the sensor has enough room to be installed without damage and removed for calibration.

Differential Pressure Sensor/Transmitters:

Thread-o-lets® are to be used for differential pressure sensor/transmitters. Taps are to be a *minimum* ½" with ½" valve reduced down to 3/8". Taps should be on the side of the horizontal run pipe at the three o'clock or nine o'clock position to avoid sediment and/or air trapping. After the valve, lines shall be run in a manner so as not to trap air. Compression fittings allowed only at the transmitter and isolation valves. Isolation valves to be ball valves installed at DP taps. The tubing for differential pressure instrument shall be installed with continuous runs from isolation valve to transmitter connection.

Pump/Strainer Differential Pressure Gauge:

Provide a single pressure gauge connected to both sides of strainers, pump suction, pump discharge, and pump discharge after check or balancing valve (whichever is farthest downstream). Gauge is not to be connected to the system through a manifold system where each branch can be isolated, and pressure relieved from the gauge. Thread-o-lets® are to be ½" when connecting to pump piping.

Gauges

Gauges should be 2-1/2" face, liquid-filled with maximum reading of 150psi (*high readings may be required at certain parts of campus, like Dean Smith Center)*. Install gauges with ½" or ¾" Thread-o-let®, bushing ½" Schedule 80 carbon steel nipple and ¼" ball valve.

Approved Manufacturer: Weksler or other approved equal

Control Air:

Compressed air tubing must be copper or stainless steel from isolation valve to instrument or control valve. Tubing shall be run in a manner that will not promote trapping of water. Each end-user of compressed air shall have individual isolation valves and control valves with positioners, which shall have filters and separators with fully automatic drains. Compressed air lines must be sized for all components using their delivery rates. Branch lines shall be 3/8" minimum with no more than five (5) feet from the isolation valve to the pressure set or solenoid. If more than two (2) components are being served, the main line size should be run to the last component served.

Install two (2) thermometers, two (2) temperature sensors, flow meter, pressure differential transmitter with local digital readout and remote pressure differential transmitter as per flow diagrams between the four (4) bridge isolation valves.

WELDING REQUIREMENTS

Welded Pipe Joints:

All welding shall be performed to meet standard ASTM B31.1 unless noted by designer as otherwise. Inspect pipe and pipe fittings for roundness before they are fit-up or set in place. Properly clean fittings; clean and bevel plain ends of steel pipe before fit-up.

Pipe Welding:

All welding shall be performed by a certified welder who is regularly engaged in welding of piping systems. All welder's certifications must be on file with the contractor and available to Owner upon request. Owner's representative will perform any observations deemed necessary before, during, or after fabrication to assure, to the Owner's satisfaction, the proper welding is provided. Owner reserves the right to perform independent testing of welds. If results of such examination are unsatisfactory, Owner reserves the right to stop in progress welding work, without any cost to Owner, until a satisfactory resolution with Owner is reached.

Unless otherwise indicated, welding shall be done using only the following processes:

a. Shielded Metal Arc Welding (SMAW), also known as "stick" welding
b. If approved, Gas Tungsten Arc Welding (GTAW), also known as "TIG" and Heliarc welding.

For any welding performed after the pipe cleaning is completed, "TIG" welding is required. For repairs and replacement of existing pipe, pipe will be hand cleaned prior to installation and root pass will be installed using "TIG" process. This is for small sections of piping and repairs.

Backing rings (chill rings) or consumable inserts are not allowed, unless specifically requested by Owner and/or Engineer.

Ground clamp must be placed as close as possible to work, to ensure no damage to electronic equipment in this system or elsewhere in the mechanical room.

Repair any welds not meeting the acceptance criteria at no cost to the Owner.

PIPE HANGERS AND SUPPORTS

Hanger and Support Spacing

Space pipe hangers and supports for steel pipe in accordance with the following schedule, with exceptions as indicated herein:

Pipe Size	Max Spacing	Pipe Size	Max Spacing
Up through 1 ¼”	7’-0”	**10”**	22’-0”
1 ½”	9’-0”	**12”**	23’-0”
2”	10’-0”	**14”**	24’-0”
2 ½”	11’-0”	**16”**	27’-0”
3”	12’-0”	**18”**	28’-0”
4”	14’-0”	**20”**	30’-0”
5”	16’-0”	**24”**	32’-0”
6”	17’-0”	**24”**	32’-0”
8”	19’-0”	**30”**	33’-0”

Spacing less than indicated above may be required to conform with building structure design and/or loading limitations. If pipe size changes between support points, maximum spacing shall be based on the smaller pipe size. Install hangers and supports to bear on outside of insulation. Place hangers and supports within one (1) foot of either side of each fitting, such as elbow and tee, each valve, strainer, and other piping specialty for piping 4” and above.

Hanger Rods (Metallic):
Rods shall have electro-plated zinc or hot dipped galvanized finish.

Bolts, Nuts, Studs and Washers:
Bolts, nuts, studs and washers shall have electro-plated zinc or hot dipped galvanized finish.

Installation:
Support all piping from building structural members using beam clamps, ceiling plates, wall brackets, or floor stands. At no time shall hangers and supports overload building structural members. Fasten ceiling plates and wall brackets securely to structure and test to demonstrate adequacy of fastening.

Coordinate hanger and support installation to properly group piping of all trades.

Suspend hangers by means of hanger rods. Perforated band iron or flat wire (strap iron) is not allowed.

Piping shall not be supported by other piping, ductwork, or conduit.

Pipe hangers or supports are not allowed to penetrate vapor barrier of pipe insulation.

Install adequate supports during erection of piping so as not to over stress either piping or equipment to which piping is connected.

MECHANICAL INSULATION

Product Delivery, Storage and Handling

All insulation material shall be delivered to the project site in original factory packaging and stored so materials are protected from moisture and weather, including long exposure to UV sunlight.

Application/Type

Install Expanded Polyisocyanurate Foam (Polyiso) or Phenolic Foam insulation as per manufacturer's specifications. If conditions demand, an alternate insulation may be used after approval by Chilled Water Director.

Insulation:

1) Expanded Polyisocyanurate Foam is a continuously molded rigid foam insulation meeting requirements of ASTM C-591, with thermal conductivity of not more than 0.19 at 75°F mean temperature, minimum density of 2 lb/ft^3, minimum compressive strength of 24psi, maximum water vapor transmission of 4.0 perm-inch, and suitable for temperature of +300°F down to -297°F. Insulation shall have a factory-applied jacket with self-sealing lap (SSL). HiTHERM HT-300 or approved equal.
2) Phenolic Foam insulation by ITW Trymer® Supercel Phenolic, Dyplast DyTherm® Phenolic or Resolco Insul-Phen® is an acceptable substitute provided insulation characteristics equal or exceed requirements specified for polyisocyanurate above.

Insulation Jacket:

1) Saran Vapor Retarder Film™ with self-sealing (SSL), ASTM C-755 and C-1136, 6 mil thickness. Permeance shall not exceed 0.01 perms, equal to Dow™ Saran 560. Elbows, fittings, valves, and butt joints shall be wrapped with three (3) layers of Dow™ Saran 520 Vapor Retarder tape.

2) Provide PVC jacket over Dow™ Saran tapes for exposed elbows, fittings and valves.

Installation

All insulation installation methods shall be performed in accordance with the latest edition of National Commercial and Industrial Insulation Standards published by MICA (Midwest Insulation Contractors Association) and manufacturer's installation instructions, *except as modified in this Section of Specifications.*

Install all products with good workmanship, smooth and even surfaces. Use full-length factory furnished material where possible. No scrap piecing is allowed. Apply insulation only on clean, dry surfaces after all rust and scale have been removed and hydro testing has been completed.

Pipes 1-1/2" and smaller, specified pipe insulation and vapor barrier with jacket shall be continuous through hanger or support locations and protective shields shall be provided to protect insulation from compressing or being crushed.

Pipe 2" and larger, where manufactured pre-insulated pipe supports are used at hanger or support locations, extend insulation and vapor barrier to insulated pipe supports. Use 3" wide vapor barrier tape at pipe support. Contractor shall be responsible for continuity of vapor barrier at insulated pipe supports.

Piping 6" or larger shall use 1-1/2" insulation. Below 6", the insulation shall be 1".

Contractor fabricated anchors, secure insulation directly to pipe surface and extended from insulated pipe four (4) times insulation thickness. For pre-insulated anchors, cover entire surface of anchor with elastomeric foam insulation (Armaflex or equal). Take special care to assure a good vapor seal at anchor.

Pipe Identification

Identify piping with marker system. Markers shall be "snap-on" or "strap-on" type depending on applicable pipe size. Install pipe identification on all Chilled Water piping. Pipe should be identified at least once every 25 feet, at each branch off line, each access door or panel, each valve and where exposed piping passes through walls/floors. Place flow directional arrows at each pipe identification location.

Markers to comply with ANSI A13.1 for color, length of color field and include flow directional arrows integrated into the marker.

For insulated pipe systems, lettering sizes are as follows:

Pipes up to 1 inch	use	1-inch letters
Pipes 1-1/4" to 2 inches	use	2-inch letters
Pipes 2-1/2" to 6 inches	use	3-inch letters
Pipes over 6 inches	use	4-inch letters

Pipe identification labels shall be abbreviated as follows:

Piping System	**Identification**	**Paint Color**
Chilled Water Supply	CHS	Rustoleum Blue 925 Safety
Chilled Water Return	CHR	Rustoleum Blue 866 Marlin
Condenser Water Supply	CWS	Sherwin Williams Green 4085 Safety
Condenser Water Return	CWR	Sherwin Williams Green MC25 Marsh

Piping System Pressure Testing

Coordinate pressure test with Engineer and Chilled Water Engineer, in writing, *at least 7 days in advance* of its occurrence and conduct tests in presence of Engineer. Engineer has right to wave requirement for witnessing testing. If Engineer is not present, conduct test in presence of Construction Manager's Representative. Representative shall sign report verifying results. Contractor shall notify Engineer of all tests to be performed.

Conduct pressure test prior to flushing and cleaning of piping systems. No systems shall be fully insulated until it has been successfully tested. Prior to the test being completed, insulation can be installed if it does not cover welds, joints, fittings or penetrations.

Conduct hydrostatic (HYDRO) test at 150psig with test medium of water unless otherwise indicated. For hydrostatic tests, remove air from piping being tested by means of air vents. If outlets are not available at high points, the Contractor shall make the necessary taps at points of highest elevation before the test is made.

The testing of the system shall be performed by a contractor experienced in pipe testing. The Contractor shall perform all phases of testing. S/he will provide supervision, pumps, calibrated gauges, instruments, test equipment, temporary piping and personnel required for tests, removal of test equipment and draining of pipes after tests have been successfully conducted.
Contractor should perform preliminary pressure test prior to witnessed record test to verify system will pass record test on first attempt. Pressure test may be made of isolated portions of piping systems to facilitate general progress of installation. Any revisions made in piping systems require re-testing of affected portions of piping systems. No pressure drop shall occur during test period. Any pressure drop during test period indicates leakage. If leaks are found, repair with new materials and repeat test; caulking or "JB Weld" is not acceptable.

Measure and record test pressure at high point in system. Where test pressure at high point in system causes excessive pressure at low point in system due to static head, portions of piping system may be isolated and tested separately to avoid undue pressure. However, every portion of piping system must be tested at the specified minimum test pressure.

Minimum test time shall be four (4) hours plus such additional time as Chilled Water Engineer may require insuring there are no air pockets in line, no broken pipe or defective materials in the line and no leaking joints.

Repair system and retest all portions of system when equipment or systems fails to meet minimum test requirements.

Submit results of each test for review to Engineer within three (3) days of test occurrence.

FLUSHING AND CHEMICAL CLEANING OF CHILLED WATER ABOVE GROUND PIPE SYSTEMS

Contractor Qualifications

UNC Chilled Water must approve the contractor performing the cleaning or supplying the chemicals. Submit contractor qualifications and references for five (5) similar projects performed within the last five (5) years. The contractor must also meet the following minimum requirements:

Performed a minimum of three (3) institutional pipe cleanings within the last 5 years,

Employed in the chemical pipe cleaning or treatment business, performing this type of work for a minimum of five (5) years,

Licensed to perform work in the State of North Carolina.

Submittals

Note: The Contractor shall provide their flushing plan to the designer at least two (2) weeks before flushing is planned to begin. The designer shall verify the temporary piping is adequately sized to attain the required velocities in the piping.

Submit the following information:

1) Detailed plans on performing the flushing and cleaning. The plan must include a strainer with opening no larger than 0.125 inches. The strainer will be removed several times during the process for inspection.
2) Chemicals, description of chemicals, their composition and function
3) Safety Data Sheets (SDS) for all chemicals to be used for pipe cleaning must be submitted to the Owner, including written notice of Owner's responsibility to notify their employees of the use of those chemicals.
4) Capacities/Ratings
5) Materials of construction
6) Dimensions and weights
7) All other appropriate data

Approved Chemical Manufacturers: Nalco or approved equal

Pipe System Cleaner

Use cleaning compound, similar to Nalco 2567, to remove organic soil, hydrocarbons, flux, pipe mill, varnish, pipe compounds, iron oxide, and lite deleterious substances – with or without inhibitor, suitable for system metals without deleterious effects. Cleaner shall contain no trisodium phosphate.

Batch Chemical Feeder

Provide bypass type batch feeder to receive chemicals in liquid or pellet form. Remove old feeder from ME room when process is completed.

Execution

Designer note: Designer shall provide contractor with flushing flow needed to ensure the velocities in any section of piping exceeds 3.0 fps. This will be the minimum flow required to properly flush the entire system. Contractor shall isolate the building chilled water pumps and supply temporary pump and piping to perform flushing. Ensure that the temporary 1/8" mesh strainer is in place before the cleaning begins.

Designer and Contractor note: The building chilled water pump may be use IF: approved for use by the Chilled Water Director, the pump has been aligned and verified by Chilled Water personnel, VFD has been certified by VFD supplier and checked by Chilled Water personnel, flow is deemed sufficient by the designing engineer, is requested in writing two (2) weeks in advance and a pump inspection is scheduled with the pump manufacturer's service representative to determine no degradation is found. At a minimum the seal will be replaced during reassembly.

The Contractor shall install temporary piping to facilitate the flushing at the ends of piping runs. The temporary piping should be line size, but no less than 1/3 main line size depending upon location. The temporary piping will be installed off the bottom of the permanent piping, top take offs will not be allowed for flushing and cleaning. This will ensure that all foreign material is removed during cleaning. If horizontal connection is required for cleaning it must be line size and any reducers must be eccentric with the flat install on bottom edge of piping.

The Contractor shall bypass all necessary equipment and sensitive components. The Contractor shall verify all lines being flushed are open with no strainers or filters in any line.

Contractor to flush and clean all new chilled water piping systems after the system has been successfully pressure tested. Chilled Water personnel shall witness the flushing and cleaning procedures. The Contractor shall provide all water for flushing and cleaning. Flushing water and cleaning solutions shall be discharged to the sanitary sewer system.

Flushing

Flush all chilled water pipe thoroughly for 30 minutes or longer, as required to remove all dirt and foreign matter from the system. UNC Construction Management representative will make determination if piping flush is complete before the Contractor can proceed to the cleaning step.

Cleaning

Drain the system.

Install temporary strainer. Strainer is to protect pump(s) and collect debris and foreign material.

Verify the strainer is clean before proceeding. Fill the system with water, vent and add recommended amount of cleaner. The cleaner should be diluted by at least a 3:1 ratio to prevent excessive attack on metal surfaces at the point of application. (**Do not allow any chemicals to contact galvanized surfaces**).

Circulate system for a minimum of 24 hours at the flow rate recommended by the chemical manufacturer. Remove the temporary mesh strainer and debris. If temporary mesh strainer was not clean, reinstall and continue cleaning.

If UNC Construction Management representative determines the temporary mesh strainer is clean, completely drain the system and continue to next step.

Fill system with clean water, vent and circulate for one (1) hour. Drain system.

If installed, remove the temporary piping and pump. If building chilled water pumps were used, commence inspection and seal replacement with pump manufacturer's service representative. After pump is inspected, realign and have alignment verified. Re-inspect for leakage.

Final Fill

If piping is to be isolated from the system for more than seven (7) days, add inhibitor to prevent corrosion. Inhibitor shall be Nalco 3DT279. Molybdate inhibitor shall not be used. If the piping is being placed in service in less than seven (7) days, Chilled Water Personnel will fill the system with water from the University Chilled Water System.

BUILDING CHILLED WATER PUMP

Design Criteria

Pump sizes, capacities, pressures and operating characteristics shall be as scheduled. Where pumps are indicated for parallel operation, each pump must be capable of delivering at least 100% of the building's full load flow.

Pumps shall have a minimum clearance of 24" on sides and ends of pumps and motors to allow access for service and repair. Pumps shall have isolation valves to allow removal of pumps for repair. Pumps shall have bled valves and gauge ports at accessible locations. All pumps shall be serviceable without removing the volute from piping connections. Pumps shall meet or exceed operating efficiencies scheduled.

Furnish pumps complete with premium efficiency inverter-duty, motors, drive assemblies, coupling guard where required and accessories as specified. Select motor with sufficient horsepower rating for non-overloading operation over entire pump curve.

Furnish each pump and motor with name plate giving manufacturer's name, pump serial number, pump capacity in GPM and head in feet at design condition, horsepower, voltage, frequency, speed, and full load current. Hydraulic testing of all pumps should be pressure tested at 150% of rated pressure, clean and painted before shipment. Manufacturer shall certify all pump ratings and contractor will supply performance information as part of the submittals.

All pumps shall operate without objectionable noise or vibration with maximum noise level of 85dBA.

Furnish one (1) set of seals and bearings for each new pump to Owner.

Centrifugal Pumps

Pumps to be base mounted and flexible coupled with working pressure of 175psi and operating temperature of 250°F intermittent. Efficiency of the pump shall be greater than 85%. Pump design must allow for servicing without disturbing piping, motor or requiring shaft realignment. Pumps shall be designed and tested to Hydraulic Institute Standards.

Casings shall be cast iron having a minimum tensile strength of 35,000psi. Removal of impeller or rotating assembly shall be accomplished without disconnecting suction and discharge piping. Casings to have tapped and plugged openings for vent, drain, and suction and discharge gauge connections.

Impellers to be made of cast bronze, hydraulically and dynamically balanced, keyed and locked to pump shafts with replaceable shaft sleeves. Rotating elements shall be mounted in heavy-duty ball bearings (greaseable preferred) and shall be equipped with water slingers on the side next to pump glands.

Chilled water pumps to be furnished with single inside, unbalanced mechanical seals with carbon rotating faces, ceramic stationary seats, Buna-N elastomer and 316 SS metal hardware, such as a John Crane Type 1 Seal or equivalent, rated up to 225°F continuous operation.
If pumps are supplied with couplings, drop-out spacer type couplings with flexible neoprene sleeves are to be used to allow for pump servicing. Diaphragm couplings may be used with high horsepower pumps.

Pumps shall be supplied with the groutable steel base plates with stainless steel drip pans under the pump assembly with threaded drain connections, to be field routed during installation. Provide drain pan constructed of 16-gauge stainless steel, all welded under pump heads and inlet/outlet flanges, including flanges of connection pipe. Drain pan shall be sized to accommodate entire pump head area from flange to flange. Provide silicone sealant between pump feet and drain pan to make pan leak-proof. Provide ½" drain opening in drain pan to be extended to nearest floor drain during the installation.

Inline pumps may be used in situations not allowing for base mounted pumps. The motors for inline pumps must not exceed 5 HP (unless approved by Chilled Water Director) and the pumps must be independently supported from the piping, either to the floor or from a wall structure.

Approved Manufacturers: Allis Chalmers, Aurora, Peerless, PACO, Worthington, Flowserve, Dresser-Rand, Bell & Gossett or other approved equal

MOTORS

Motor submittal shall include the manufacturer, horsepower, voltage, phase, hertz, RPM, motor type, motor enclosure type, frame type, insulation class, NEMA design designation, service factor, nominal full load efficiency, full load power factor, full load amps, weight and all other appropriate data.

Motors driven by variable frequency drives (VFD) shall comply with the latest NEMA MG-1 Section IV, Part 31 unless otherwise noted and shall be inverter duty type. Starter insulation shall be designed to operate under maximum voltage peak of not less than 1600 volts with time reset not greater than 0.1 micro-seconds. Motor shall have corona resistant stator insulation. Motors shall be rated for 90°C temperature rise with 40°C ambient.

Motors shall have a 1.15 service factor in 40°C maximum ambient temperature. Select motors so they do not exceed nameplate rating nor operate into service factor to meet specified duty.

Motors shall have totally enclosed fan enclosures.

Motors shall have greaseable ball bearings with ANSI/AFBMA L-10 rating of 200,000 hours.

Motor vibration shall not exceed 0.15 inch per second, unfiltered peak.

Motor-Grounding

Provide additional grounding of VFD driven motors to help protect the motor and its components from harmful transients generated by the VFD.

All motors driven by VFDs shall be grounded as specified:

1) Mechanical contractor shall provide shaft grounding ring (AEGIS SGR or equal) on motor shaft. Soft carbon brushes are not acceptable. Install per manufacturer's written instructions.
2) The electrical contractor shall bond motor casing to local structural steel with braided straps of bare flat copper conductor cable, width to be specified by designing engineer.

3) The electrical contractor shall bond motor feeder equipment grounding conductor to the motor terminal box. The contractor shall make sure to clean and prepare paint so that the connection for the ground will be clean and permanent. (Pertains to ALL motors)

Installation

Protect electric motors from premature failure by assuring that their windings are not subjected to concrete dust and other contaminants.

Set base mounted pumps on concrete bases (housekeeping pad), or concrete inertia base. The concrete pads must be dowelled to the floor at 12-inch intervals and have one mat of ¼" rebar to provide the base strength. Hold down bolts must penetrate the housekeeping pad and go into the existing floor pad a minimum of 5 inches. Level the base and bolt down prior to grouting. Fill entire base with non-shrinking grout. Use end caps during the grouting to prevent overflow when end caps are not integral with base plates. Housekeeping pad may be extended to allow for suction diffuser support.

Installation Note: Piping/pump alignment verification shall be performed by Chilled Water personnel.

Install all pumps in strict accordance with manufacturer's instructions to avoid any stress and misalignment. Piping connections to pumps shall not create stress on pump casing. After final connections are completed, the contractor shall remove the bolts from the flanged connections at pumps. Piping shall remain aligned with pump connections after all bolts have been removed. If piping becomes misaligned after bolts have been removed, or if bolts cannot be removed by hand, the contractor shall revise piping to align piping with pump connection. If after completion of the strain free verification the piping system must be disassembled at any point in the future, the strain free verification shall be repeated. During final assembly after successful test the gaskets shall be replaced.

Contractor shall employ a technician certified by the selected pump manufacturer to field align flexible coupled pumps after the base has been grouted, the pipe/pump alignment check and flushing and cleaning procedures have been completed. Align pump and motor in all four planes: vertical angular, horizontal angular, vertical parallel, horizontal parallel. Alignment shall be within the recommended value by pump manufacturer (not coupler manufacturer), but not over 0.002" parallel and 0.003" angular per radius inch. Record and submit all results of alignment procedure to Engineer. Soft foot measurements must be less than 0.005" on each foot.

Installation Note: Pump/Motor alignment verification shall be completed independently by a Chilled Water representative.

Contractor shall produce a copy of the pump manufacturer's alignment specifications (not pump coupler manufacturer's specifications) at the time of Chilled Water verification or with pump submittals.

Where pump connection size and indicated line sizes are not identical, provide necessary concentric reducers/increasers for vertical piping at pump connection and eccentric reducers/increasers for horizontal piping at pump connection. Install eccentric reducers/increasers with top of pipe level. All isolation valves and flexible connections are to be full line size.

Pump Startup

Note: To avoid damage to mechanical seals, never start or run pump in dry condition.

To perform pump startup:

Verify that piping system has been tested, flushed, cleaned and filled.
Verify that pipe/pump alignment has been verified by UNC Chilled Water representative.

Verify that pump/motor alignment has been independently verified by UNC Chilled Water representative.
Verify the VFD has been certified, with UNC Chilled Water technician present.
Verify pump rotation.
Prime pump and vent air from casing.

BRIDGE CONTROLS

PRIMARY/SECONDARY BUILDING BRIDGE SYSTEM
Description of Operation

A chilled water bridge system shall fall into one of two categories, depending on the kind of building loads that are served. The building category will be designated when the designer/engineer have reviewed the building loads with the Chilled Water Engineer/Director. These categories are: (1) critical loads, (2) non-critical loads. The "non-critical loads" category generally includes comfort-cooling applications. The "critical loads" category includes research facilities, their auxiliary equipment, medical facilities with operating rooms, and computer facilities.

BRIDGE OPERATION FOR NON-CRITICAL AND CRITICAL LOADS

Building and EMCS Interface

Bridge enable signal shall be a dry contact from BAS. Contact shall close when there is a demand for chilled water and open when there is no demand.

When the building control system is used to provide this signal, outdoor air temperature, cooling coil valve output, or other parameters may be used to initiate bridge operation/shutdown. Designer shall specify parameter to be used. Bridge modes of operation will be controlled by chilled water based on the bridge enable signal from the BAS.

Failure Mode

In a failure of the bridge controls or pump failure, the position of the TCV-A will be determined by the type of bridge. In the event of a failure, a non-critical valve will fail in the closed position and a critical valve will fail in the open position. The Chilled Water Engineer shall determine whether the building is critical or non-critical.

INSTRUMENT SPECIFICATIONS

The Chilled Water Bridge devices below will be provided by UNC Chilled Water. Contact the Chilled Water Engineer for assistance with placing these devices. Chilled Water personnel will mark the appropriate location on the piping if desired.

-Chilled Water Pump VFD(s) (Pumps to be provided by contractor)
-TCV-A(B) Valve(s) including actuator
-RTDs for Supply and Return Temperature
-Thermowells for RTDs
-Flow Meter
-Differential Pressure Transmitter (Utility – **if needed**; connection points for this DPT are required)
-Differential Pressure Transmitter (End of Line)
-Chilled Water Bridge Controller
-Control Panel for Bridge Controller

The contractor shall install ALL components (with exception of the Chilled Water Bridge Controller) and shall be responsible for providing all components not listed above. Contact Chilled Water Engineer to determine if the Utility DPT is required.

PANEL Bridge Enclosure/Control Cabinet

The Bridge Enclosure Cabinet is supplied by UNC – Chilled Water Department at a time when requested by the contractor through UNC Construction Management. The panel is mounted in a place agreed upon by contractor and UNC Chilled Water Engineer. The panel shall be mounted and conduits and wiring to the field instruments installed before the back plane is requested and delivered. ALL control wiring in bridge panel, VFDs and all Chilled Water instruments will be terminated by UNC – Chilled Water Department personnel.

INSTALLATION NOTE:

1) No penetrations are allowed in the top of the panel box. All penetrations must be made with liquid tight connectors.

2) The 120VAC power to the panel must be on its own designated breaker and have nothing else tapped off it. No junction boxes are allowed in the conduit run to ensure that no other circuits can be tapped off it. A pulling "C" may be used instead of a junction box to assist in wire pulling or if maximum number of bends in conduit has been reached.

Chilled Water Bridge Controller

All control functions for this system are performed by a multi-loop controller. This controller will be purchased, programmed and installed in a control panel by Chilled Water Department. Before the installation of the back plane, the instruments and transmitters shall be checked for communication and operational capability by UNC – Chilled Water personnel. To perform this testing all associated equipment for the operation must be completed, including compressed air lines and any other required equipment. Once this testing is completed, the responsible Chilled Water technician will bring the back plane, complete installation and termination of all control wiring and test the operation and communication of the bridge panel. The controller shall be provided with two ethernet connections to the campus network.

VFD Variable Frequency Drive

Designer Note: The VFD must not be powered up or operated until it has been certified and commissioned by Chilled Water Personnel.

Unless otherwise as required by the VFD manufacturer, the motor drive output wiring from the VFD shall be properly sized XHHW-2 run in grounded metallic conduit. The use of specific "VFD Cable" is generally not required. No top entry allowed.

Installation Note: ***Separate conduit shall be used for input power wiring, motor wiring, control and communications wiring and if supplied, brake unit wiring.***

TCV-A Return Temperature Control Valve

UNC Chilled Water shall provide a lug style or flanged, Class 150 butterfly valve for installation by the contractor. The valve shall include the actuator. The actuator will be electric and shall use 120V power. Backup power to insure the proper failure position will be from a UPS, which will be provided and installed by UNC Chilled Water.

Preferred valve orientation is with the shaft in the horizontal plane. When mounted in the horizontal plane, the actuator assembly must not be located at the bottom of the pipe. The position indicator must be visible from the ME room floor. There must have sufficient clearance to remove the actuator assembly from the valve. Slip-on

flanges shall not be used for control valve installation and can only be used if approved for installation by UNC Chilled Water Director.

FE/FT 1 Magmeter Flow Meter

Magmeter flow meter: The Chilled Water Department will purchase this equipment with project funds. The mechanical contractor shall install this flow element in the piping system as specified by the designer. The contractor shall furnish and install flanges for flow meter. Designer shall clearly show the orientation and mounting of the flow meter on the construction drawings. The preferred meter installation is in horizontal pipe runs. For a meter being installed in the same size bridge piping, there shall be a minimum of 5 pipe diameters before the meter and 2 pipe diameters after the meter. If installing smaller meter than the bridge piping, have four pipe diameters between the meter flanges and the reducers on both sides of the meter, the same requirement shall be used for any fittings used adjacent to the meter. For horizontal installation, this meter must be installed in either the three o'clock or nine o'clock positions or a maximum of 45 degrees below these positions. The meter must not be installed downstream from a control valve. The meter must not be installed in the highest point of a pipe system.

RTU, STU Temperature Sensor Assembly

RTU – Return Temperature Utility – must be installed a minimum of 7 pipe diameters downstream of the last connected tee. The thermowell must be installed in the same plane or above the tee and upstream of the control valve to avoid cold trap.

STU – Supply Temperature Utility – must be installed a minimum of 3 pipe diameters from pipe fittings.

Installation Note: Install with enough length in liquid-tite metallic conduit and leads to allow removal of the RTD for calibration without disconnecting wiring or liquid-tite metallic conduit. Ensure the thermowell is installed on the side of the pipe. See Appendices for proper installation.

Thermometers

Select devices for highest pressures and temperatures existing in respective systems in accordance with ANSI specifications.

Glass thermometer: Thermometer shall be an industrial glass thermometer with cast aluminum body and have a 9" scale. The scale will be from 0º to 120ºF degree scale with 2ºF degree division. The thermometer shall have a 3 ½" stem and variable degree angle adjustment and union connection.

Solar thermometer: Thermometer shall be an industrial solar powered thermometer capable of reading a temperature range 30º to 120ºF with an accuracy of ± 2%.

Thermowell for Thermometer

The thermowell shall have ¾" MNPT process mount, with 1 1/8" instrument mounting, and 3 ½" length. The thermowell shall be compatible with the specified thermometer and be constructed of brass.

PDT–1, 2 Differential Pressure Transmitter

Taps for differential pressure transmitters shall be ½" Thread-o-lets® with a ½" ball valve attached. Downstream of the ball valve contractor shall run 3/8" copper or stainless-steel tubing to connect to the transmitter.

The End of Line Differential Pressure Transmitter (PDT-1) shall be installed at the worst location in the system from a pressure standpoint. This is typically near the most remote air handler, or the air handler located on the highest floor of the building. Contact the Chilled Water Engineer for assistance in determining the appropriate location.

The Utility Differential Pressure Transmitter (PDT-2) shall be located just inside the bridge isolation valves, as close as possible to the location that the chilled water pipes enter the building. The Chilled Water Engineer can assist with this placement as well.

Installation Note: Verify taps for PDTs are mounted on the side of horizontal runs in piping, not on top or bottom. PDTs shall be mounted with connection taps on top of unit and tubing run up to connections. Tubing must be run so air is not trapped in lines.

Instrumentation Cables

Control cable type: Charlotte Wire and Cable no. CW09305 (or equivalent approved by Chilled Water), 2-conductor, stranded, twisted, 18-gauge, foil shield with drain wire, Stranded, Tinned Copper, PVC jacket, 300Volt rating.

RTD Temperature Sensors: Charlotte Wire and Cable no. CW09306 (or equivalent approved by Chilled Water), 3-conductor, stranded, twisted, 18-gauge, foil shield with drain wire, Stranded, Tinned Copper, PVC jacket, 300Volt rating.

No bridge wiring conduits will be shared with any other system.

Power wiring shall be in one dedicated conduit with no junction boxes. Pulling “C” and/or “LB” only.

Installation Note: The cables shall be installed in one continuous run with all shield drain wires grounded at the control panel.

Pneumatic or Instrumentation Lines

All new bridge installations will use an electric A-valve. For all bridge retrofit applications where there is a pneumatic A-valve, and air will continue to be available, all pneumatic lines for chilled water valves must be run from an air dryer and supplied with a filter regulator set. All lines must be stainless steel or soldered copper; plastic air lines are not permitted.

Conduit for Power and Instrumentation

All conduit for wiring can be EMT conduit. Conduit will be run for all bridge panel wiring. Each conduit must have similar type wiring. Do not mix shielded cable with AC power.

All wiring in conduits shall be continuous wire runs with no splices. No junction boxes are allowed. Only pulling “C” and “LB”.

If there are any transitions from EMT to flexible conduit, that flexible conduit MUST be liquid-tight metallic conduit.

Installation Note: Conduit for PDT-1 will be run from the bridge panel to the transmitter with only the wire for the transmitter in the conduit.

APPENDICES

Appendix A - Exposed Utility Temporary Support

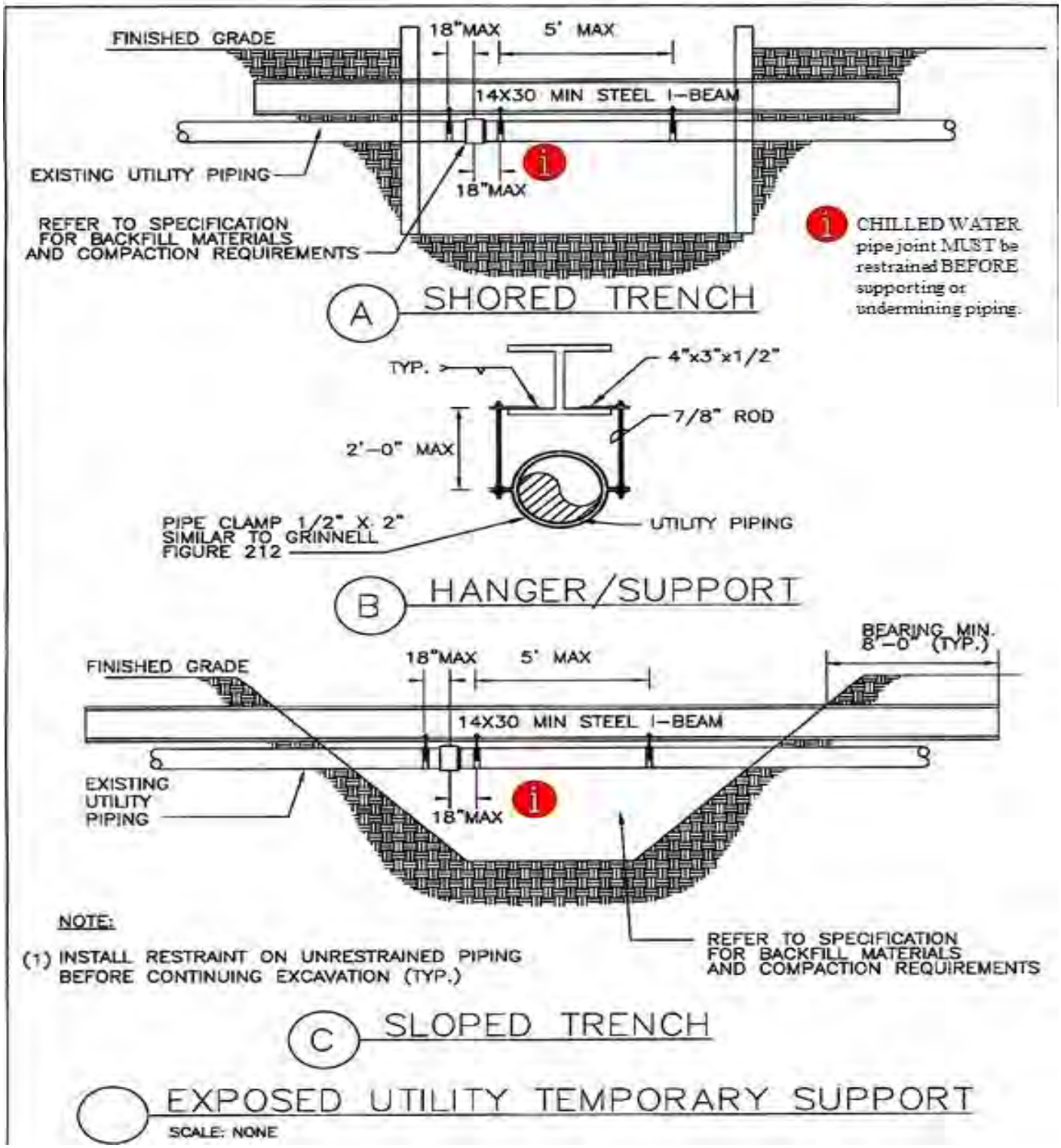

Appendix B - Typical Chilled Water Trench thru Paved Area

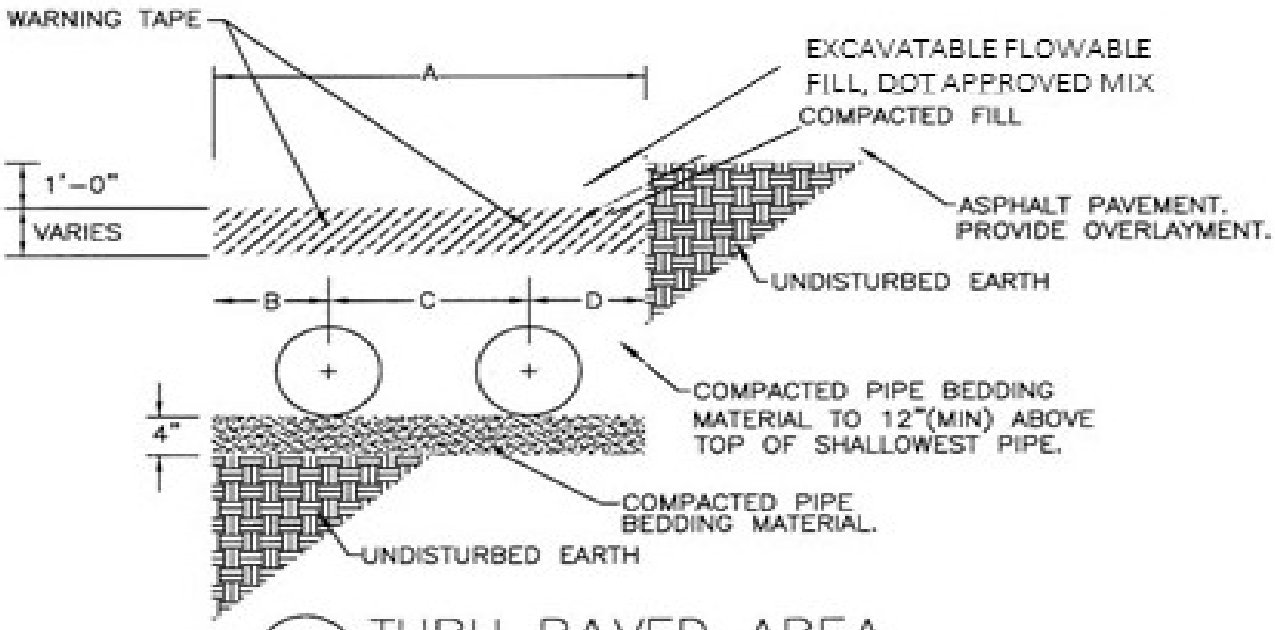

A THRU PAVED AREA
SCALE: NONE

Pipe Size	A	B/D	C
4"	4'-8"	1'-2"	2'-4"
6"	5'	1'-3"	2'-6"
8"	5'-4"	1'-4"	2'-8"
10"	5'-8"	1'-5"	2'-10"
12"	6'	1'-6"	3'
14"	6'-4"	1'-7"	3'-2"
16"	6'-8"	1'-8"	3'-4"
18"	7'	1'-9"	3'-6"
20"	8'-4"	2'-4"	3'-8"
24"	9'	2'-6"	4'
30"	11'	2'-9"	5'-6"
36"	12'	3'	6'

NOTE:

1. EXISTING CHILLED WATER PIPING EXPOSED DURING EXCAVATION AND CHILLED WATER PIPING SHOWN TO HAVE MECHANICAL RESTRAINTS ADDED ARE TO BE BACKFILLED AS SHOWN HERE FOR NEW PIPING.

2. MINIMUM BURIAL DEPTH SHALL BE 36".

TYPICAL CHILLED WATER TRENCH DETAIL
SCALE: NONE

Appendix C - Typical Chilled Water Trench thru Landscaped Area

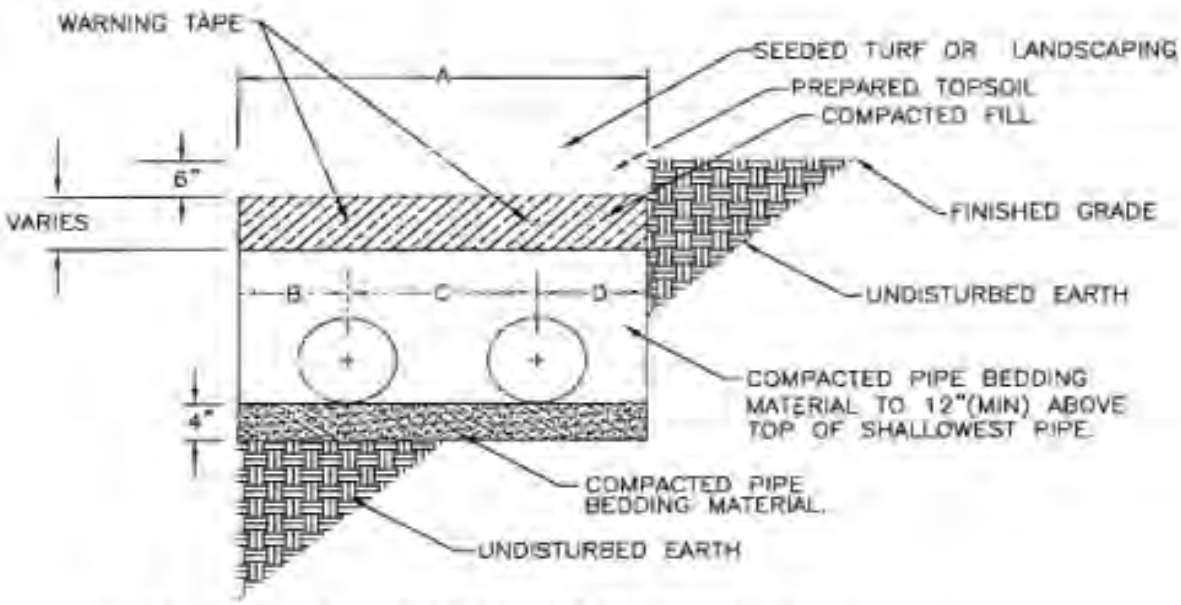

B THRU LANDSCAPED AREA

Pipe Size	A	B/D	C
4″	4′-8″	1′-2″	2′-4″
6″	5′	1′-3″	2′-6″
8″	5′-4″	1′-4″	2′-8″
10″	5′-8″	1′-5″	2′-10″
12″	6′	1′-6″	3′
14″	6′-4″	1′-7″	3′-2″
16″	6′-8″	1′-8″	3′-4″
18″	7′	1′-9″	3′-6″
20″	8′-4″	2′-4″	3′-8″
24″	9′	2′-6″	4′
30″	11′	2′-9″	5′-6″
36″	12′	3′	6′

NOTE:

EXISTING CHILLED WATER PIPING EXPOSED DURING EXCAVATION AND CHILLED WATER PIPING SHOWN TO HAVE MECHANICAL RESTRAINTS ADDED ARE TO BE BACKFILLED AS SHOWN HERE FOR NEW PIPING.

MINIMUM BURIAL DEPTH SHALL BE 36".

TYPICAL CHILLED WATER TRENCH DETAIL

SCALE: NONE

Appendix D - Utility Butterfly Valve Installation

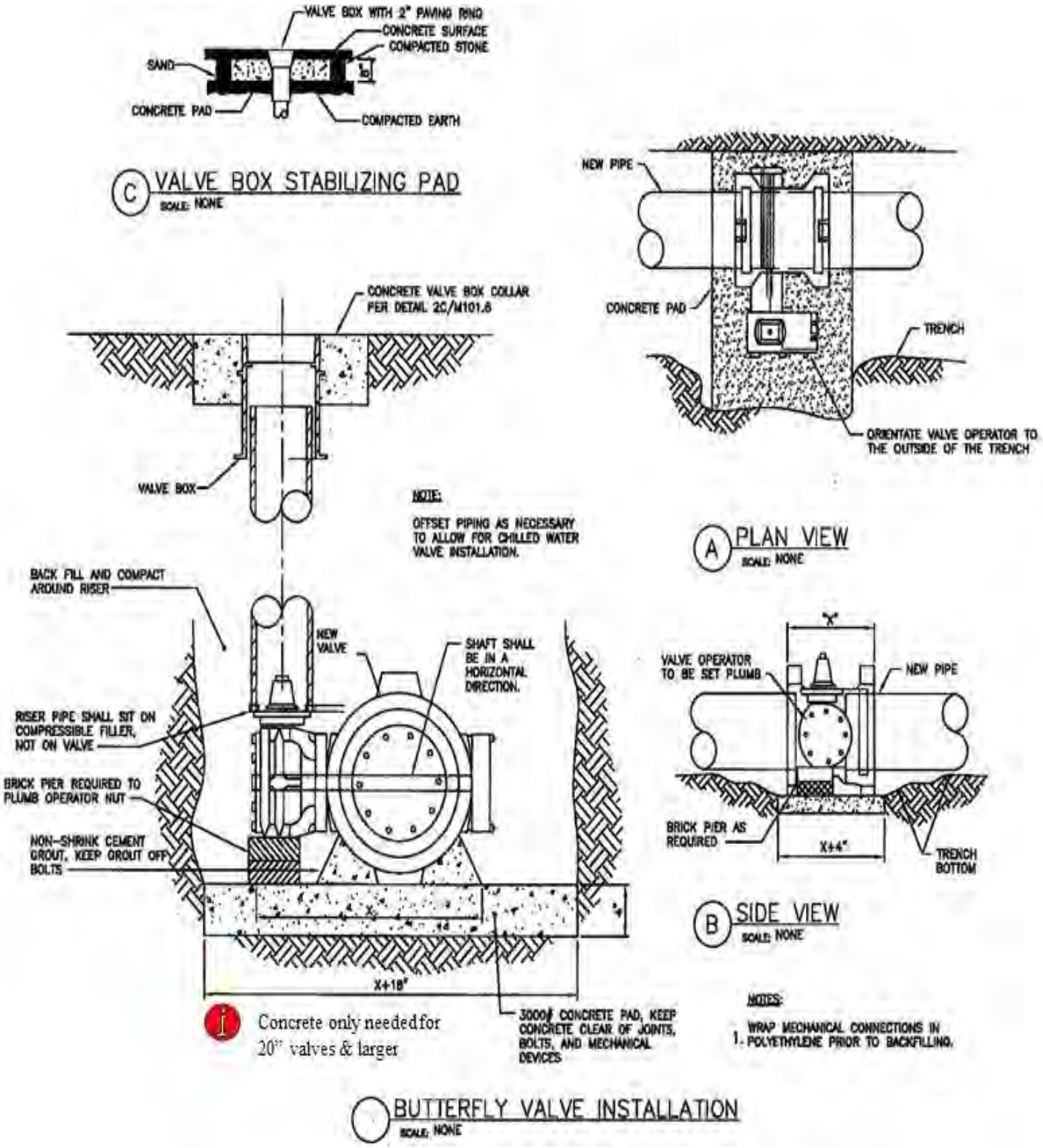

Appendix E - Chilled Water Air Vent Handhold

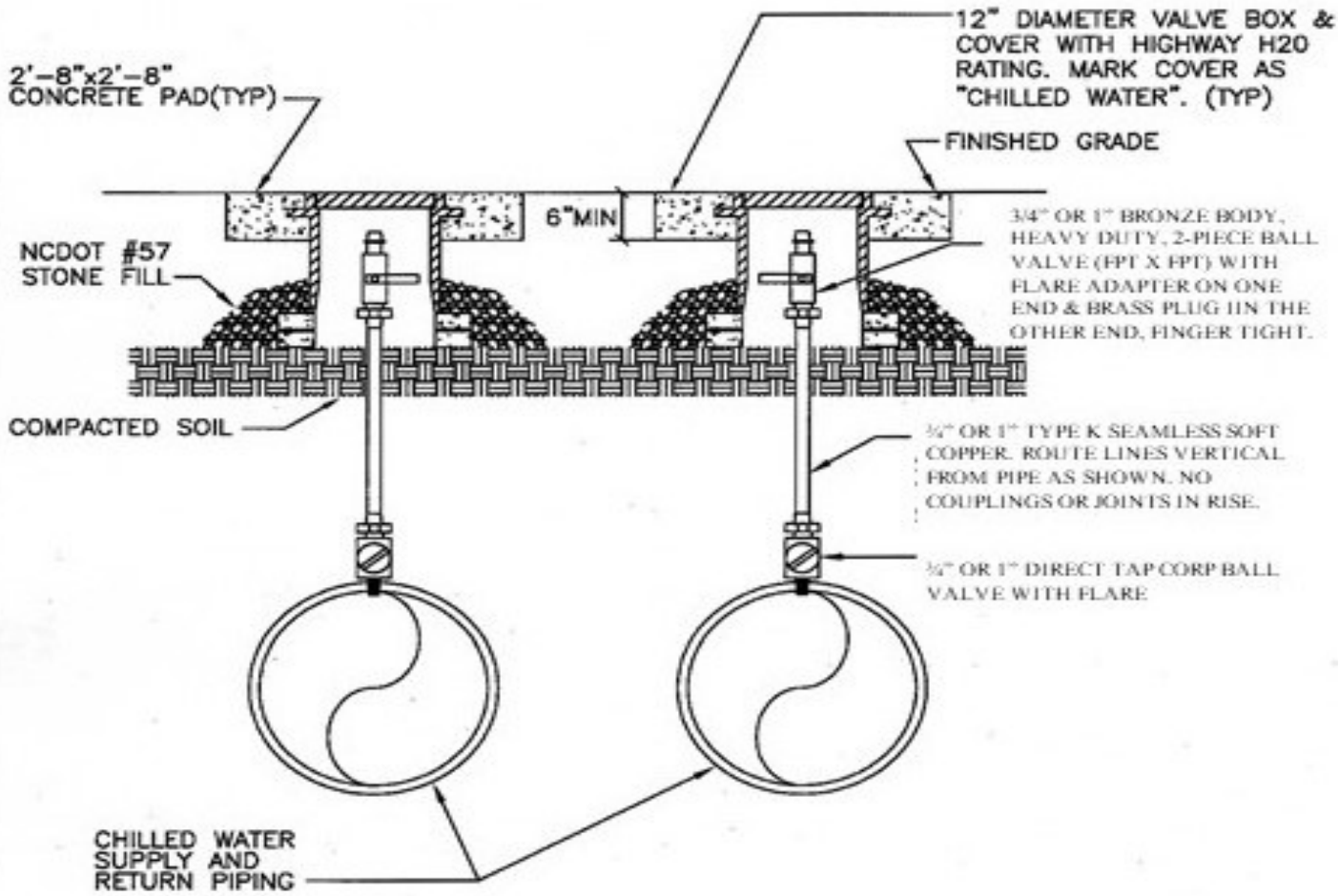

NOTES: VENT VALVE MUST BE 6 INCHES BELOW GRADE SO THE COVER DOES NOT CONTACT THE VALVE & ENTIRE TOP MECHANICAL ASSEMBLY MUST BE WITHIN THE VENT BOX.

CHILLED WATER AIR VENT HANDHOLE

SCALE: NONE

Appendix F - Ductile Iron/Steel Pipe Transition At Wall Penetration

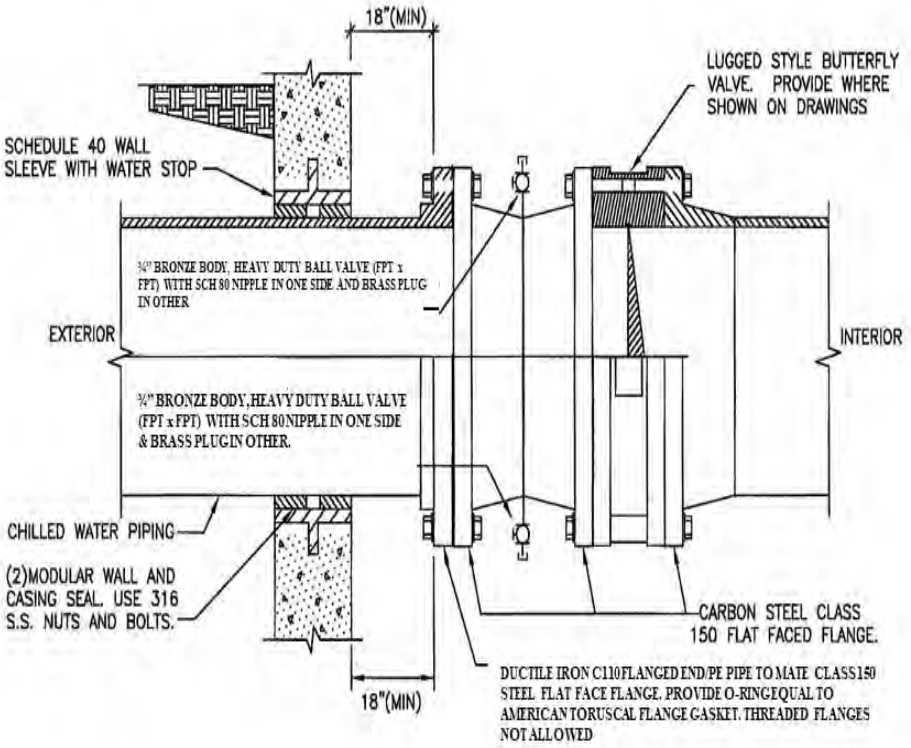

DUCTILE IRON/STEEL PIPE TRANSITION AT WALL PENETRATION

SCALE: NONE

Appendix G - Utility Piping Termination

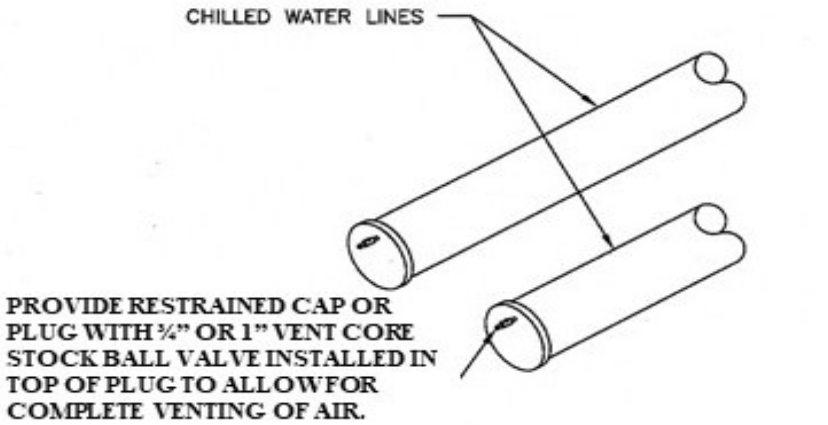

NOTES:

BRING VENT PIPING TO SURFACE USING CHILLED WATER AIR VENT HANDHOLE DETAIL. (SEE STANDARD DETAIL ON APPENDIX E)

PIPING TERMINATION

SCALE: NONE

Appendix H - Chiller Water Bridge Flow Diagram

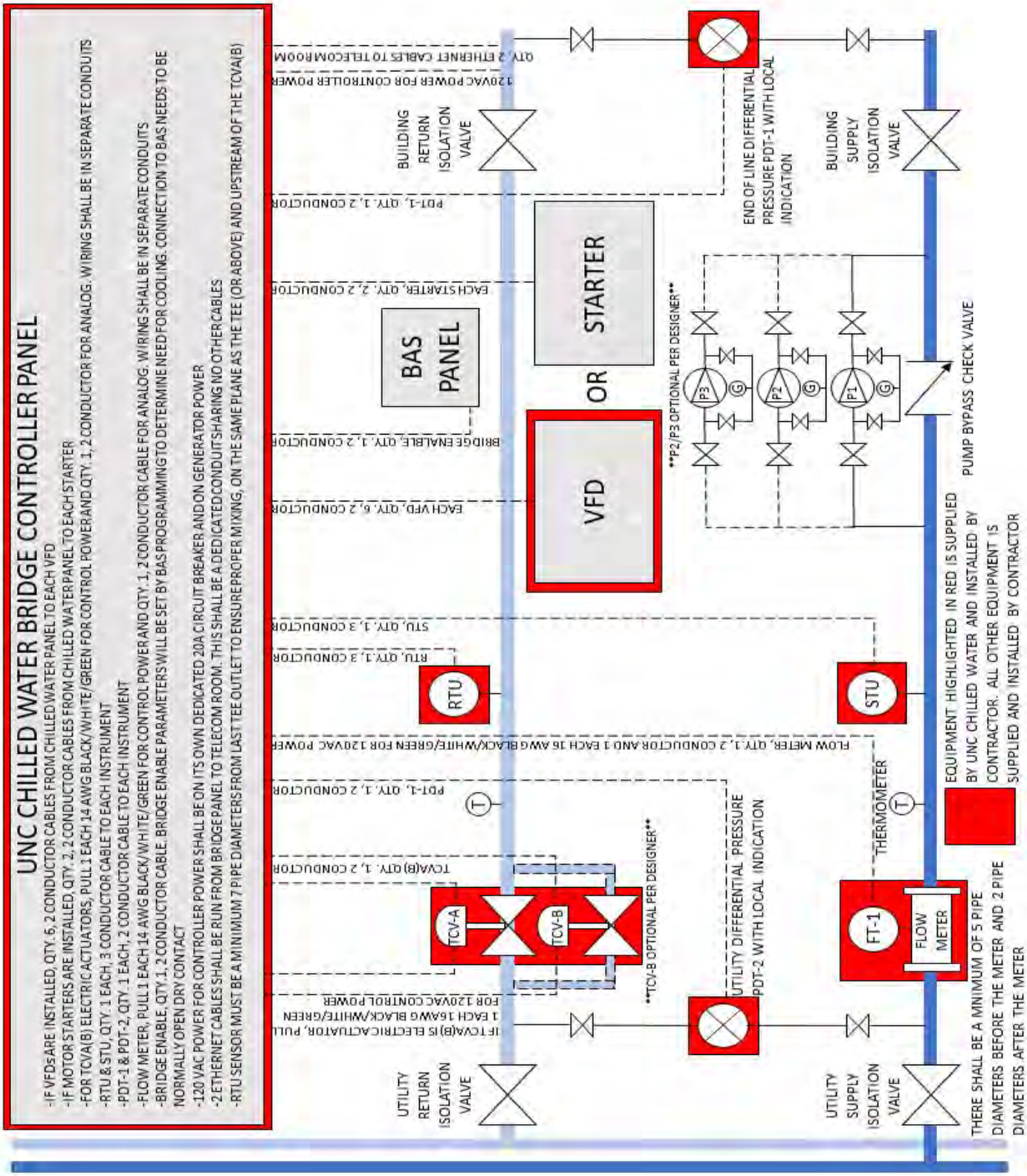

Appendix I - Pump Differential Pressure Gauge Detail

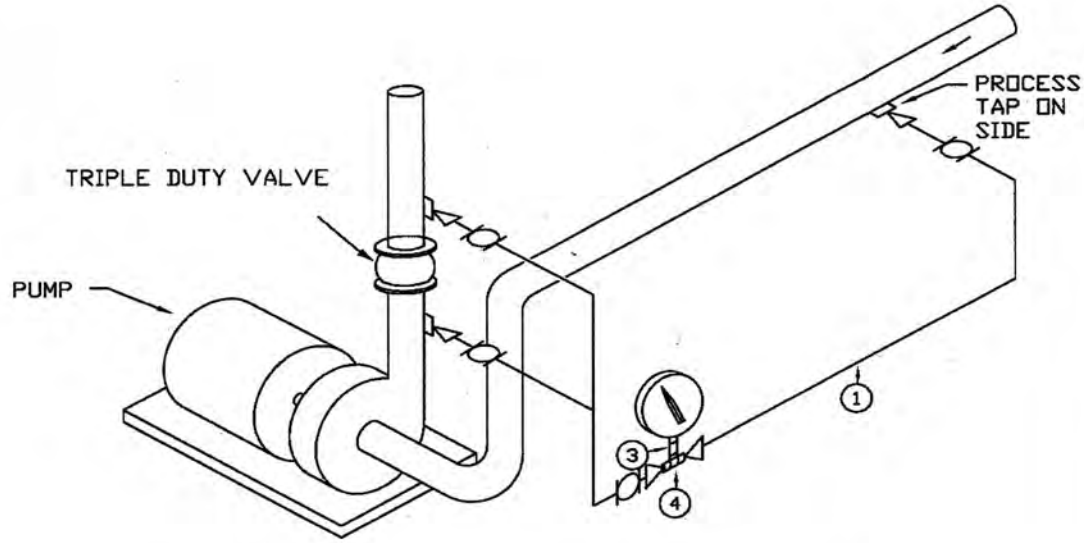

ITEM NO.	MAT.	DESCRIPTION
1	*	1/2" SCHEDULE 40 PIPE
2	*	1/2" T x 1/2" NPT MALE -
		CONNECTION
3	*	1/2" NPS x (AS REQ'D) NIPPLE
4	*	1/2" TEE
5	*	1/2" BALL VALVE
	*	REFER TO SPECIFICATION

NOTES:

(1) SUPPORT TO PLACE NO STRAIN ON INSTRUMENT CONNECTIONS.

(2) PLACEMENT OF PIPING AND INSTRUMENT WILL VARY. PLACE IMPULSE LINES AND INSTRUMENT MOUNTING AS FIELD CONDITIONS REQUIRE. IMPULSE LINES AND INSTRUMENT SUPPORT MUST BE LOCATED TO AVOID INTERFERENCE WITH PUMP MAINTENANCE. MAXIMUM LENGTH OF IMPULSE LINE SHALL BE 5'-0". FIELD VERIFY LOCATION OF INSTRUMENT SUPPORT, INSTRUMENT TAPS, AND IMPULSE LINES WITH OWNER/DESIGNER PRIOR TO INSTALLATION.

(3) MOUNT TRANSMITTER FROM PIPE SUPPORT MOUNTED TO STRUCTURE.

(4) CONTRACTOR SHALL FIELD VERIFY MOUNTING METHOD AND RECEIVE OWNER/DESIGNER APPROVAL PRIOR TO MOUNTING.

(5) INSTALL A FOURTH TAP FOR READING PRESSURE IF A STRAINER IS INSTALLED.

DIFFERENTIAL PRESSURE GAUGE DETAIL

TYPICAL

Appendix J - Requesting Outage for Chilled Water Service

Requests for planned outages of chilled water to any facility will only be accepted from the Facility Service Department involved in the work being done, Construction Management or a Contractor providing construction or renovation services on campus. All requests must be received no less than 5 business days in advance of the start date of the work.

Procedure for Requesting a Chilled Water Outage

1. Gather the following information and submit to UNC Chilled Water Department using *Appendix L* of these Specifications:
    - Name of Facility Service Department, Construction Manager or Contractor submitting request along with their contact information.
    - Description of work to be preformed.
    - Name of Customer/Department and Building Name.
    - List of any Building Contacts or occupants who are aware of the work that needs to be accomplished.
    - Begin and End Times for Outage.

2. Prior to confirming an outage can be accommodated, Chilled Water will review the real or potential impact of the request. The review will include:
    - Impact on other customers
    - Potential impact of weather to initiate or complete the service outage
    - Any special or unusual material needs for service restoration
    - A plan to complete work and restore chilled water to the affected buildings
    - Time required to complete work and restore chilled water to the affected buildings

3. Once the review is completed and outage is acceptable, confirmation will be provided to the requesting party. Should any considerations be of sufficient concern to require further evaluation or delay, Chilled Water will inform the requesting party of reasons and alternatives.

4. Once the outage request has been accepted UNC Customer Service will be notified. They will issue a blanket notification to building occupants and other UNC Departments that might be affected. Chilled Water will post notices on the building no later than 48 hours prior to the outage starting.

5. Prior to restoring service, Chilled Water will contact the requesting party to confirm the system can safely be restored with no danger to any personnel associated with or involved in the outage.

6. At the completion of the outage, Chilled Water will issue a blanket notification to building occupants and other UNC Departments through UNC Customer Service and will remove posted notices.

Contact Information

For any questions or concerns, please contact Chilled Water at 962-1448.

Request for a Chilled Water Outage

A request for a chilled water outage needs to be submitted at least 5 working days before the outage is needed. This allows us to set the outage up with the proper contacts and arrange for any personnel needs that the outage may require.

Organization requesting outage: _____

Person requesting outage: _____

Outage location: _____

Reason for outage: _____

Date and duration of outage: _____

Contact Person: _____

Phone Number: _____

Chilled Water Checklist

	Task	Notes	✓
1	Conduct coordination meeting with Chilled Water before any work begins.	**	
2	Before any excavations begin, call in a locate ticket to UNC (919-962-8394), One Call (800-632-4949) and OWASA (919-968-4421)		
3	Coordinate the installation of all underground chilled water piping with Chilled Water. Do not backfill until all piping has been viewed, pictures have been taken and piping has been surveyed in. Backfill piping, taking in all recommendations from third party testing agency and ensure all backfill material and means and methods meet or exceed specifications.		
4	Coordinate all jet flushing and testing with Chilled Water and Project's Designer. Chilled Water must be present to witness both. All test are 4 hours long and will be scheduled between 6:30am and completed no later than 3pm.		
5	Install any necessary pancakes and make any necessary piping modifications required to properly circulate the water for the clean and flush procedure. This may involve additional connection points, looped connections, or temporary bypass connections in order to achieve proper flow rates and velocities. Chilled Water's water treatment company (NALCO) must be consulted for this procedure.	Include items that must be removed prior to this procedure.	
6	Install and grout all piping supports and install all hangers		
7	Pressure test all piping (4-hour test)	Include items that must be removed prior to this procedure.	
8	Flush and clean all interior steel piping (24+ hour process). Bridge pumps are NOT to be used for circulation.	Include items that must be removed prior to this procedure.	
9	Install all components in the Chilled Water Bridge including the flowmeter, control valve with actuator, thermowells, RTDs, pump(s), differential pressure transmitters, etc.		
10	Align pumps		

11	Perform "stress free test" on the bolted connections		
12	Install all insulation		
13	Install the Chilled Water Control Panel		
14	Connect power to the Chilled Water Control Panel		
15	Connect the network connection to the Chilled Water Control Panel		
16	Install the End of Line Differential Pressure Transmitter, and connect it to the Chilled Water Control Panel		
17	Connect control wiring to all bridge instrumentation		
18	Contact Chilled Water to terminate all bridge instrumentation in the control panel		