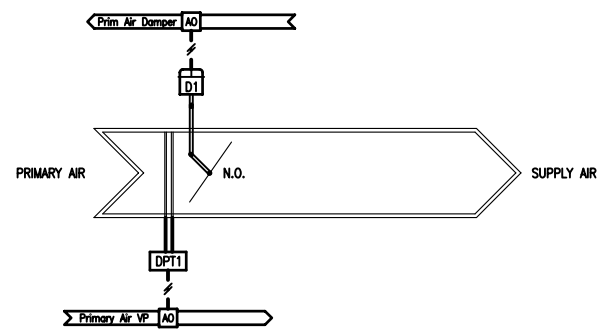

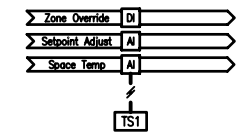

Single Duct VAV Box (Cooling Only)

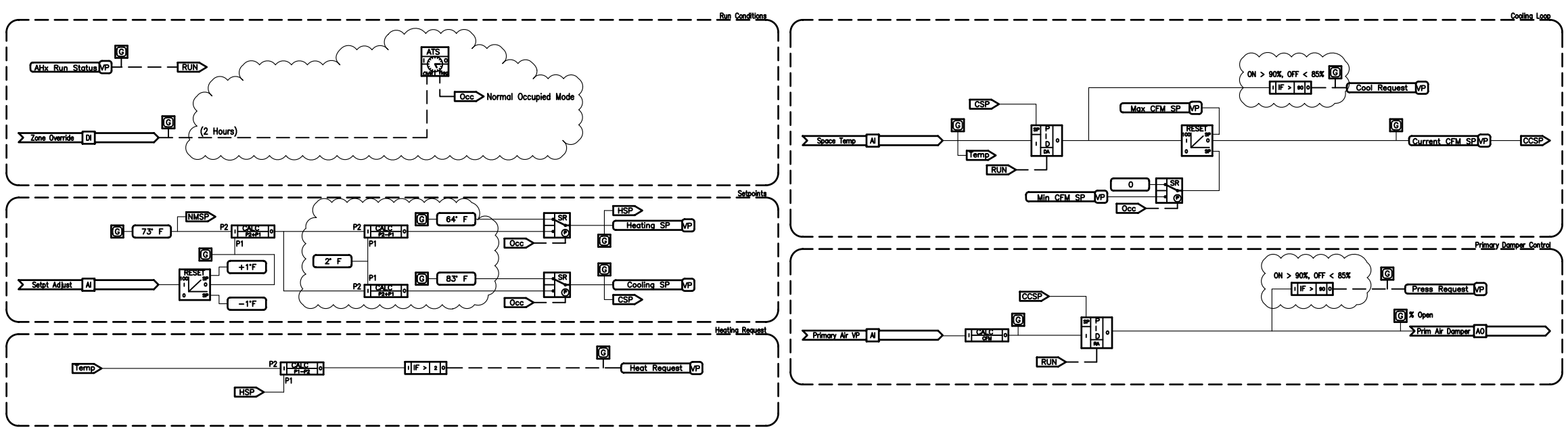

Software Logic Diagram

POINTS LIST

ADDRESS	POINT DESCRIPTOR	POINT TYPE DI	AI	DO	AO	VP	REMARKS
	Space Temp		*				
	Prim Air Damper				*		
	Primary Air VP		*				
	Setpoint Adjust		*				
	Zone Override	*					

LOGIC VARIABLES

BINARY	ANALOG	DESCRIPTION
Occ		ON WHEN OCCUPIED MODE ACTIVE
RUN		ON WHEN UNIT COMMANDED TO START
SBH		ON WHEN SETBACK HEATING MODE ACTIVE
SBC		ON WHEN SETBACK COOLING MODE ACTIVE
WUP		ON WHEN WARM-UP MODE ACTIVE
CDN		ON WHEN COOL-DOWN MODE ACTIVE
	Temp	VARIABLE VALUE OF SPACE TEMPERATURE
	HSP	VARIABLE CALCULATED VALUE OF ACTIVE HEATING SETPOINT
	CSP	VARIABLE CALCULATED VALUE OF ACTIVE COOLING SETPOINT
	CCSP	VARIABLE CALCULATED VALUE OF CURRENT CFM SETPOINT

REVISIONS

NO.	DESCRIPTION	DATE

THE UNIVERSITY of NORTH CAROLINA at CHAPEL HILL

The University of North Carolina
Chapel Hill, North Carolina

Standard Control Drawings

Eng	KDS
Drawn	KDS
Chkd	---
Appd	---
Issued	6/15/2012
Job No.	----
Scale	N/A
Proj Code	

Rev 6

Single Duct VAV Box (Cooling Only)

00 OF 00
SHEET NUMBER

C-2.00
DWG NUMBER

© 2008 FACILITY DYNAMICS ENGINEERING