UNC Chapel Hill Control Guideline Specifications

Preface and Implementation Guidance to the Design Engineer

These Guideline Specifications set forth principles to assist the designers of building mechanical systems in specifying and procuring the controls for those building systems. The intent of this document is not to require a "one-size-fits-all" solution because that is simply not in the best interest of UNC, nor is it a practical approach for procuring controls given the state of the control industry. This document provides tools for the designer to specify the appropriate level of control system quality for reliable control.

Decision-making guidance to the design Engineer is provided in these documents in the form of 'Editor's Notes' so that the Engineer may make prudent decisions and specify the most effective requirements for the system being installed and for those that have to use them. It is ultimately the designer's job to assess the systems to be controlled and the environments in which they will be installed, commissioned, and operated and utilize the appropriate elements of this specification.

Edits to each specification section shall be performed in Microsoft Word. All editing should be performed using the 'Track Changes' options with all changes not accepted. This allows the Owner to review all changes proposed to the Master Documents.

These Guideline Specifications apply the following principles to the control systems designed and installed at UNC:

- **Principle 1 – The control system must first and foremost provide effective and reliable control, commensurate with the systems it is controlling**. Obviously the types, complexities and the criticalities of the systems being controlled will dictate the quality of the control system that should be applied to them. The ultimate quality of the control system is primarily dictated by the components that sense conditions, execute logic commands, control devices and document the systems they are controlling. These components are generally specified in Master Sections 230901 (BAS Basic Materials, Interface Devices, And Sensors), and 230903 (BAS Field Panels).
- **Principle 2 – The manufacturer and installer must be highly qualified with extensive experience and must be committed to thorough Commissioning (Cx)**. While the control system components are very important, equally or more important is the expertise and commitment of the installing contractor and their collaboration with the overall commissioning team. The approved UNC BAS providers listed in Master Section 230900 are qualified to perform work on the UNC campus and are the only BAS providers allowed to bid the project. Note that on partial renovation projects to existing buildings where exiting BAS controls will continue to be used, the new controls will be bid as sole source to match the exiting building's BAS system.
- **Principal 3: Specify detailed, energy efficient and proven Sequence of Operations** The designer must fully specify the logic for equipment sequences of operations and not leave any programming needs and interpretations to the BAS programmer to figure out. The purpose of the UNC control logic drawings is to provide that detailed, consistent and comprehensive design logic for all projects at UNC. Standardized control design logic

drawings and sequence of operations also helps both installers and UNC maintenance and operating staff as they work on the many buildings on campus. The UNC guidelines include a library of logic diagrams and written sequence of operations that are somewhat general in nature and covers most but not all applications and designs. The written sequences will need to be modified as needed for each project's specific design application. The UNC logic diagrams should be used as a starting point and will need some editing by the designer to meet the specific project's control design requirements.

- **Other: Require monitoring of standalone Equipment and Systems.** For standalone equipment and systems that are not controlled by the BAS, a BACnet interface is required for monitoring and when needed alarming to the BAS. Examples include potable water booster pumps and controls, motor VFD interfaces, critical lab equipment such as lab air compressors and vacuum systems, electrical panel energy metering systems and lighting control systems.

Conclusion:

Application of these Principles to a given project requires the designer to research/consider the project-specific environment and requirements and to edit these specification appropriately. The specific decision depends on a number of other important variables, including the specific HVAC control applications being served, the critical nature of the area or facility being served, the quality and capabilities of the local installer, and operator capabilities. Those specification items identified in Blue Italic Text are to be modified, all other items in the specification are generally to remain unchanged unless approved by UNC personnel.

The designer is cautioned to apply or find the appropriate level of expertise to complete this specification - otherwise, the result could be a specification with inadequate and contradictory requirements that cannot be enforced. Depending on the controls complexity the designer should arrange for a separate meeting with UNC to review and discuss the sequence of operations and control logic during CD design review.

UNIVERSITY OF NORTH CAROLINA AT CHAPEL HILL
STANDARD CONTROL DRAWINGS

LIST OF DRAWINGS

REVISIONS

NO.	DESCRIPTION	DATE

THE UNIVERSITY of NORTH CAROLINA at CHAPEL HILL

The University of North Carolina
Chapel Hill, North Carolina

Standard Control Drawings

Eng	RR
Drawn	HJN
Chkd	---
Appd	---
Issued	05/05/2021
Job No.	----
Scale	N/A
Proj Code	

Revision 2021

TITLE SHEET

00 OF 00
SHEET NUMBER

T-1.00
DWG NUMBER

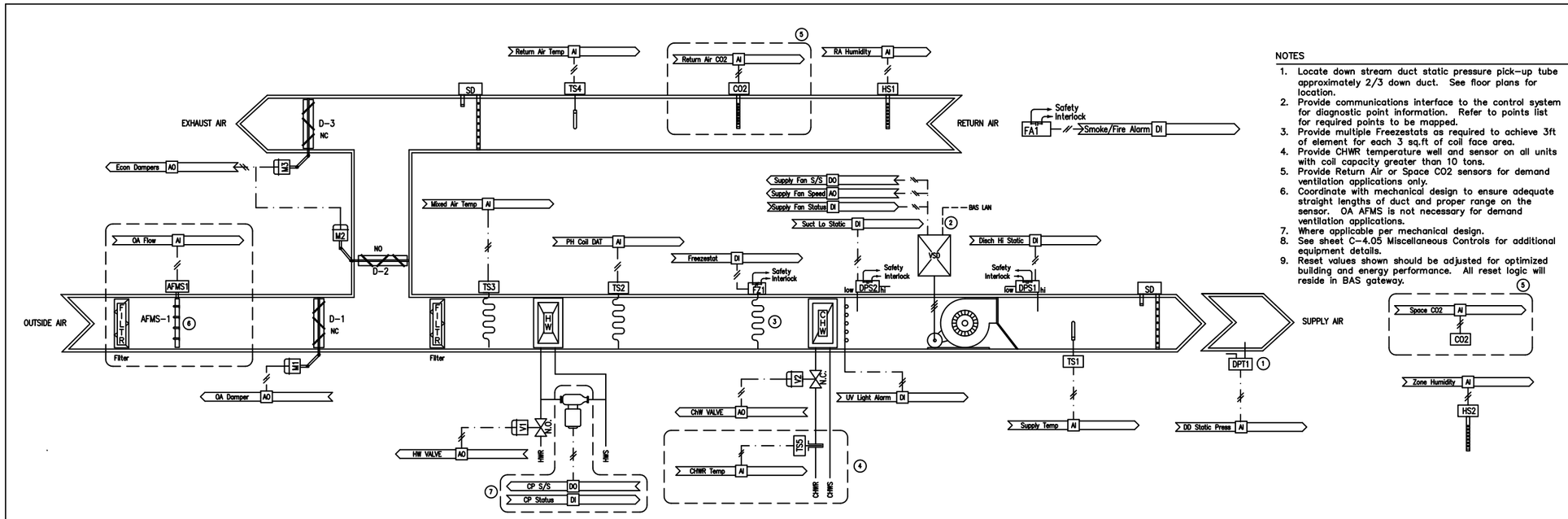

NOTES

1. Locate down stream duct static pressure pick-up tube approximately 2/3 down duct. See floor plans for location.
2. Provide communications interface to the control system for diagnostic point information. Refer to points list for required points to be mapped.
3. Provide multiple Freezestats as required to achieve 3ft of element for each 3 sq.ft of coil face area.
4. Provide CHWR temperature well and sensor on all units with coil capacity greater than 10 tons.
5. Provide Return Air or Space CO2 sensors for demand ventilation applications only.
6. Coordinate with mechanical design to ensure adequate straight lengths of duct and proper range on the sensor. OA AFMS is not necessary for demand ventilation applications.
7. Where applicable per mechanical design.
8. See sheet C-4.05 Miscellaneous Controls for additional equipment details.
9. Reset values shown should be adjusted for optimized building and energy performance. All reset logic will reside in BAS gateway.

SINGLE DUCT VAV AH WITH PREHEAT & CHW COIL, NO RETURN FAN, DCV

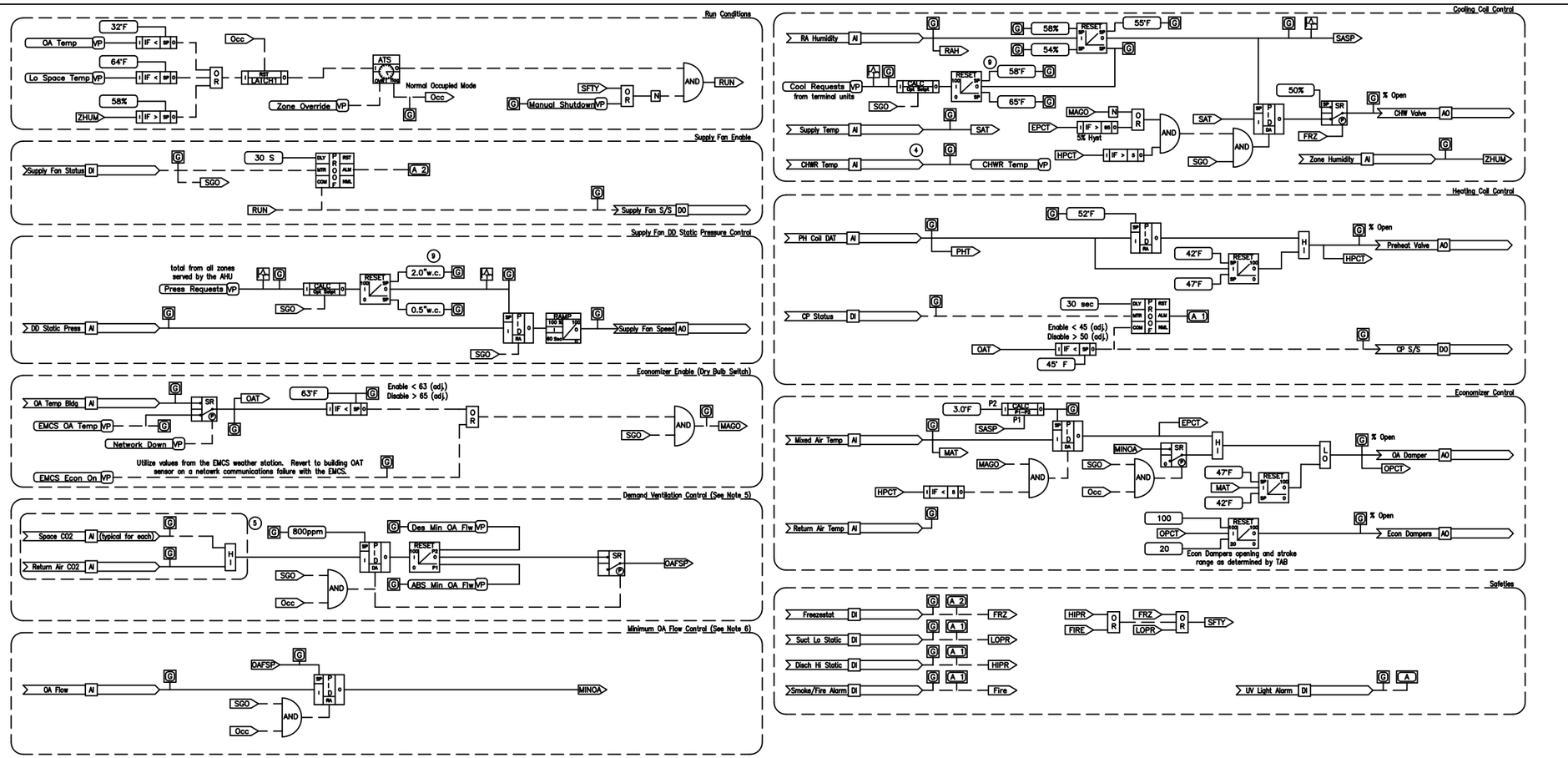

Software Logic Diagram

POINTS LIST

ADDRESS	POINT DESCRIPTOR	DI	AI	DO	AO	VP	REMARKS
	Supply Fan S/S			•			
	Supply Fan Status	•					
	Supply Fan Speed				•		
	DD Static Press		•				
	Supply Temp		•				
	Smoke/Fire Alarm	•					
	Disch Hi Static	•					
	Suct Lo Static	•					
	PH Coil DAT		•				
	Freezestat	•					
	Mixed Air Temp		•				
	Return Air Temp		•				
	Return Air CO2		•				See Note 5
	Space CO2		•				See Note 5
	OA Flow		•				See Note 6
	CHW Valve				•		
	CHWR Temp		•				See Note 4
	HW Valve				•		
	Circ Pump S/S			•			See Note 7
	Circ Pump Status	•					See Note 7
	Econ Dampers				•		
	OA Damper				•		
	VFD Alarm/Fault					•	Interface Point
	VFD Fault Code					•	Interface Point
	VFD Spd Feedback					•	Interface Point
	VFD KW					•	Interface Point
	VFD In Bypass					•	Interface Point

LOGIC VARIABLES

BINARY	ANALOG	DESCRIPTION
Occ		ON WHEN OCCUPIED MODE ACTIVE
RUN		ON WHEN UNIT COMMANDED TO START
SGO		ON WHEN SUPPLY FAN ENERGIZED AND STATUS PROVEN
MAGO		ON WHEN OA CONDITIONS ALLOW ECONOMIZER CONTROL
LOPR		ON WHEN LO STATIC ALARM IS ACTIVE
FRZ		ON WHEN FREEZESTAT IS IN ALARM
Fire		ON WHEN FIRE ALARM IS ACTIVE
HIPR		ON WHEN HI STATIC ALARM IS ACTIVE
SFTY		ON WHEN "FRZ", "Fire", "HIPR" OR "SMK" ARE ON
	HST	VARIABLE CALCULATED VALUE OF HIGHEST SPACE TEMPERATURE
	OAT	VARIABLE VALUE OF OUTSIDE AIR TEMPERATURE
	SAT	VARIABLE VALUE OF SUPPLY AIR TEMPERATURE
	PHT	VARIABLE VALUE OF PREHEAT AIR TEMPERATURE
	MAT	VARIABLE VALUE OF MIXED AIR TEMPERATURE
	MINOA	VARIABLE VALUE OF MIN OA DAMPER POSITION
	SASP	VARIABLE CALCULATED VALUE OF SUPPLY AIR TEMPERATURE SETPOINT
	HPCT	VARIABLE CALCULATED VALUE OF HW VALVE POSITION
	EPCT	VARIABLE CALCULATED VALUE OF ECONOMIZER PID OUTPUT
	OAFSP	VARIABLE CALCULATED VALUE OF OUTSIDE AIR FLOW SETPOINT
	OPCT	VARIABLE CALCULATED VALUE OF OUTSIDE AIR DAMPER POSITION

ELECTRIC LADDER DIAGRAMS

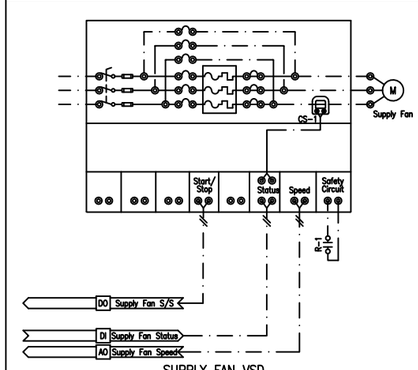

SUPPLY FAN VSD

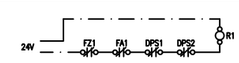

SAFETY INTERLOCK DETAIL

REVISIONS

NO.	DESCRIPTION	DATE

The University of North Carolina at Chapel Hill

The University of North Carolina
Chapel Hill, North Carolina

Standard Control Drawings

Eng	RR
Drawn	RR
Chkd	---
Appd	---
Issued	6/15/2021
Job No.	----
Scale	N/A
Proj Code	

REV. 2021

SINGLE DUCT VAV AH WITH PREHEAT & CHW COIL, NO RETURN FAN

00 OF 00
SHEET NUMBER

C-1.00

DWG NUMBER

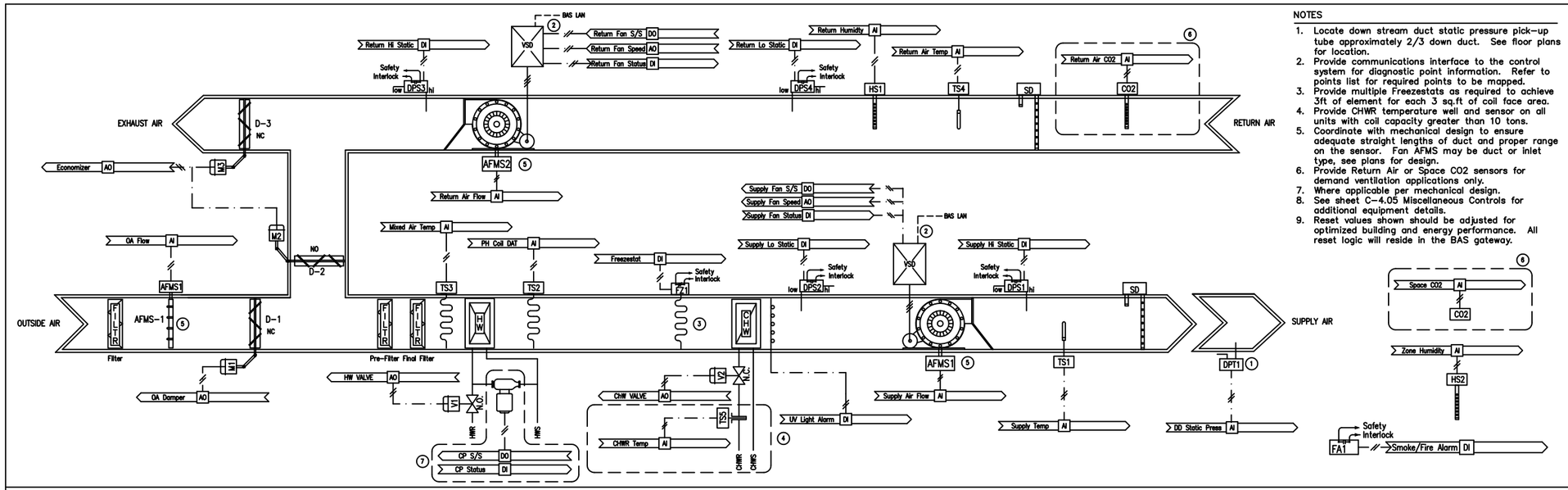

SINGLE DUCT VAV AH WITH PREHEAT, CHW COIL & RETURN FAN, NO UNIT EXHAUST AT MIN OA FLOW

NOTES

1. Locate down stream duct static pressure pick-up tube approximately 2/3 down duct. See floor plans for location.
2. Provide communications interface to the control system for diagnostic point information. Refer to points list for required points to be mapped.
3. Provide multiple Freezestats as required to achieve 3ft of element for each 3 sq.ft of coil face area.
4. Provide CHWR temperature well and sensor on all units with coil capacity greater than 10 tons.
5. Coordinate with mechanical design to ensure adequate straight lengths of duct and proper range on the sensor. Fan AFMS may be duct or inlet type, see plans for design.
6. Provide Return Air or Space CO2 sensors for demand ventilation applications only.
7. Where applicable per mechanical design.
8. See sheet C-4.05 Miscellaneous Controls for additional equipment details.
9. Reset values shown should be adjusted for optimized building and energy performance. All reset logic will reside in the BAS gateway.

POINTS LIST

ADDRESS	POINT DESCRIPTOR	DI	AI	DO	AO	VP	REMARKS
	Supply Fan S/S			•			
	Supply Fan Status	•					
	Supply Fan Speed				•		
	Return Fan S/S			•			
	Return Fan Status	•					
	Return Fan Speed				•		
	DD Static Press		•				See Note 1
	Supply Temp		•				
	PH Coil DAT		•				
	Freezestat	•					
	Mixed Air Temp		•				
	Return Air Temp		•				
	Return Air Humidity		•				
	Return Air CO2		•				See Note 6
	Space CO2		•				See Note 6
	CHW Valve				•		
	CHWR Temp		•				See Note 4
	HW Valve				•		
	Econ Dampers				•		
	OA Damper				•		
	OA Flow		•				
	Supply Hi Static	•					
	Supply Lo Static	•					
	Return Hi Static	•					
	Return Lo Static	•					
	Supply Air Flow		•				
	Return Air Flow		•				
	Smoke/Fire Alarm	•					
	Circ Pump S/S			•			See Note 7
	Circ Pump Status	•					See Note 7
	VFD Alarm/Fault					•	Interface Pt. (Typ. ea VFD)
	VFD Fault Code					•	Interface Pt. (Typ. ea VFD)
	VFD Spd Feedback					•	Interface Pt. (Typ. ea VFD)
	VFD KW					•	Interface Pt. (Typ. ea VFD)
	VFD In Bypass					•	Interface Pt. (Typ. ea VFD)
	Zone Humidity		•				
	UV Light Alarm	•					

LOGIC VARIABLES

BINARY	ANALOG	DESCRIPTION
Occ		ON WHEN OCCUPIED MODE ACTIVE
RUN		ON WHEN UNIT COMMANDED TO START
SGO		ON WHEN SUPPLY FAN STATUS PROVEN
RGO		ON WHEN RETURN FAN STATUS PROVEN
MAGO		ON WHEN OA CONDITIONS ALLOW ECONOMIZER CONTROL
FRZ		ON WHEN FREEZESTAT IS IN ALARM
Fire		ON WHEN FIRE ALARM IS ACTIVE
SLPA		ON WHEN SUPPLY LO STATIC PRESSURE ALARM IS ACTIVE
SHPA		ON WHEN SUPPLY HI STATIC PRESSURE ALARM IS ACTIVE
SFTY		ON WHEN ANY SHUTDOWN SAFETY IS ON
	HST	VARIABLE CALCULATED VALUE OF HIGHEST SPACE TEMPERATURE
	SCFM	VARIABLE VALUE OF SUPPLY AIR FLOW (CFM)
	OAT	VARIABLE VALUE OF OUTSIDE AIR TEMPERATURE
	SAT	VARIABLE VALUE OF SUPPLY AIR TEMPERATURE
	PHT	VARIABLE VALUE OF PREHEAT AIR TEMPERATURE
	MAT	VARIABLE VALUE OF MIXED AIR TEMPERATURE
	RAH	VARIABLE VALUE OF RETURN AIR HUMIDITY
	MINOA	VARIABLE VALUE OF MIN OA DAMPER POSITION
	DASP	VARIABLE CALCULATED VALUE OF DISCHARGE TEMPERATURE SETPOINT
	CPCT	VARIABLE CALCULATED VALUE OF CHW VALVE POSITION
	HPCT	VARIABLE CALCULATED VALUE OF HW VALVE POSITION
	EPCT	VARIABLE CALCULATED VALUE OF ECONOMIZER PID OUTPUT
	OAFLW	VARIABLE VALUE OF OUTSIDE AIR FLOW (CFM)
	OAFSP	VARIABLE CALCULATED VALUE OF OA FLOW SETPOINT

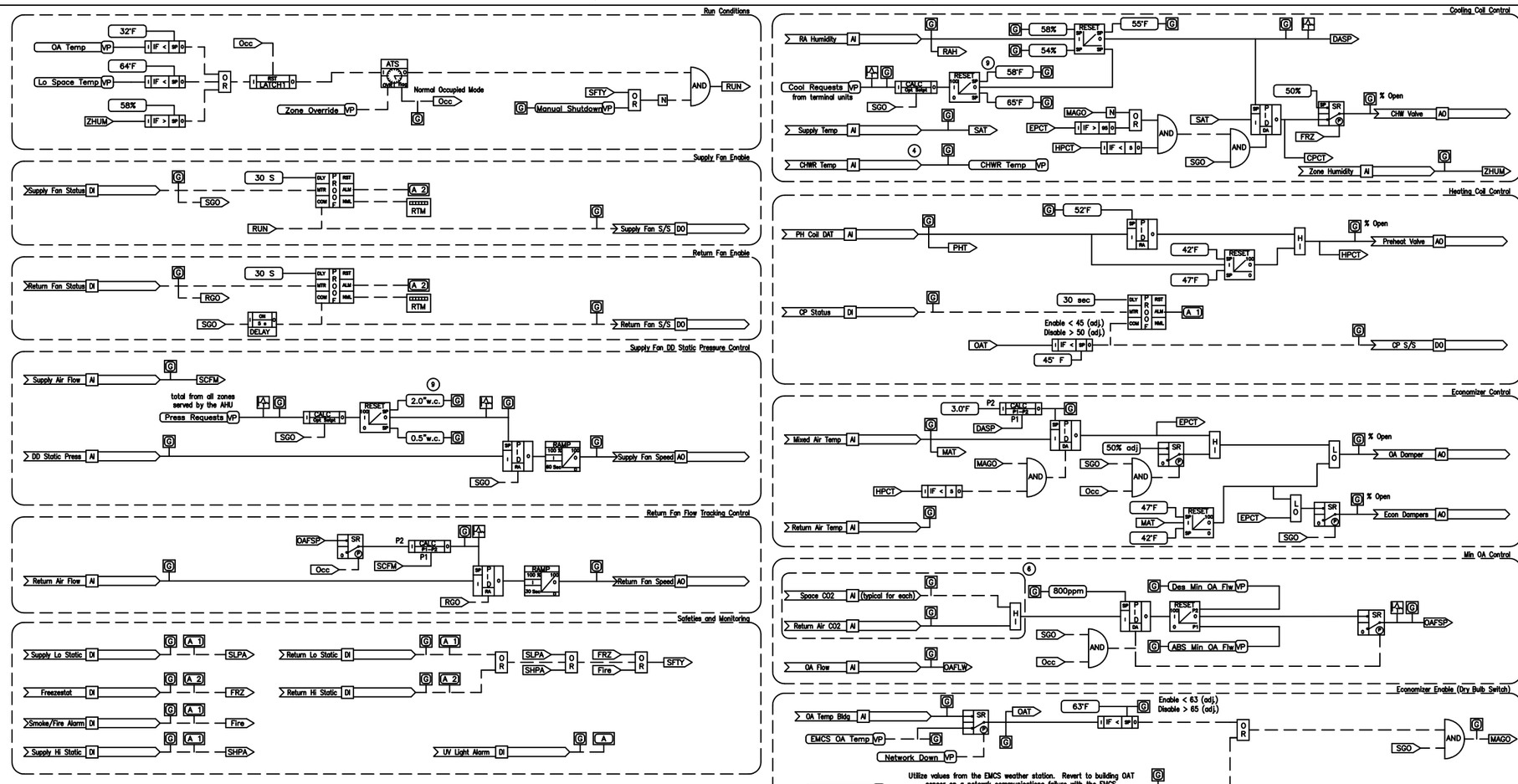

Software Logic Diagram

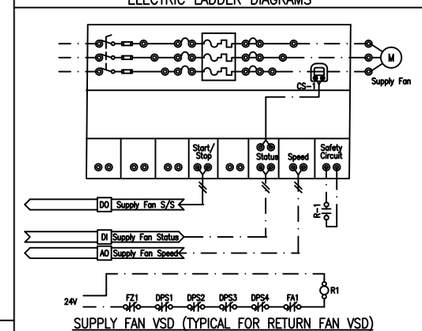

ELECTRIC LADDER DIAGRAMS

SUPPLY FAN VSD (TYPICAL FOR RETURN FAN VSD)

REVISIONS

NO.	DESCRIPTION	DATE

THE UNIVERSITY of NORTH CAROLINA at CHAPEL HILL

The University of North Carolina
Chapel Hill, North Carolina

Standard Control Drawings

Eng	RR
Drawn	RR
Chkd	---
Appd	---
Issued	6/16/2021
Job No.	----
Scale	N/A
Proj Code	

REV. 2021

SINGLE DUCT VAV AH WITH PREHEAT, CHW COIL & RETURN FAN

00 OF 00
SHEET NUMBER

C-1.01
DWG NUMBER

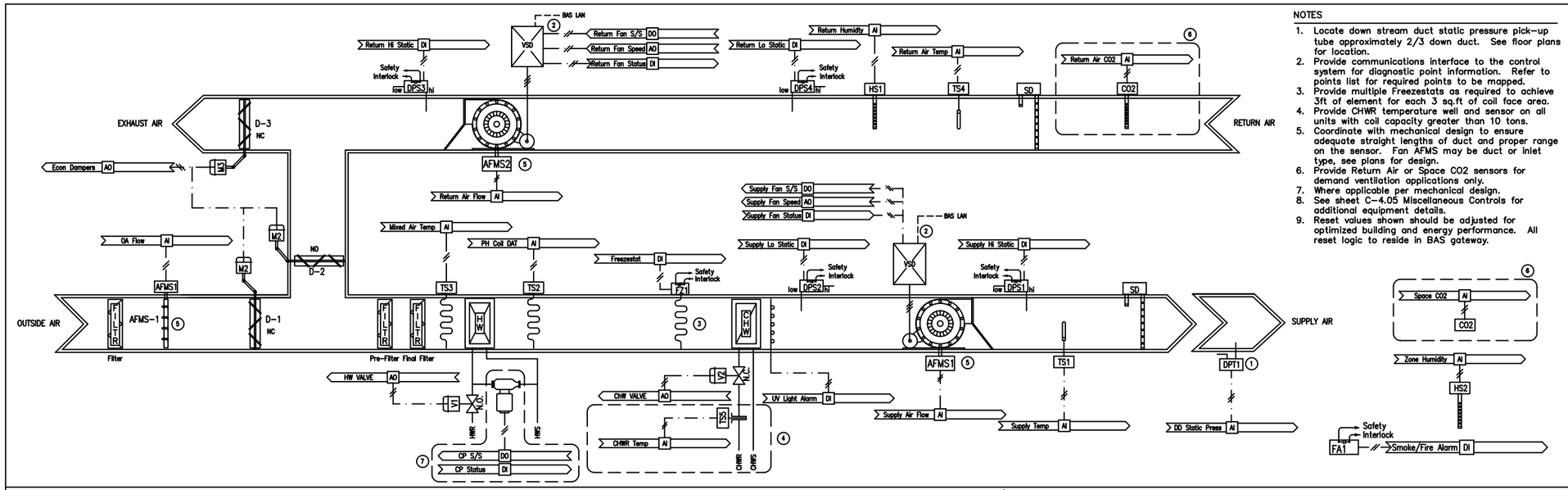

NOTES

1. Locate down stream duct static pressure pick-up tube approximately 2/3 down duct. See floor plans for location.
2. Provide communications interface to the control system for diagnostic point information. Refer to points list for required points to be mapped.
3. Provide multiple Freezestats as required to achieve 3ft of element for each 3 sq.ft of coil face area.
4. Provide CHWR temperature well and sensor on all units with coil capacity greater than 10 tons.
5. Coordinate with mechanical design to ensure adequate straight lengths of duct and proper range on the sensor. Fan AFMS may be duct or inlet type, see plans for design.
6. Provide Return Air or Space CO2 sensors for demand ventilation applications only.
7. Where applicable per mechanical design.
8. See sheet C-4.05 Miscellaneous Controls for additional equipment details.
9. Reset values shown should be adjusted for optimized building and energy performance. All reset logic to reside in BAS gateway.

POINTS LIST

ADDRESS	POINT DESCRIPTOR	DI	AI	DO	AO	VP	REMARKS
	Supply Fan S/S			•			
	Supply Fan Status	•					
	SF VSD Alarm					•	Interface Point
	Supply Fan Speed				•		
	Return Fan S/S			•			
	Return Fan Status	•					
	RF VSD Alarm					•	Interface Point
	Return Fan Speed				•		
	DD Static Press		•				See Note 1
	Supply Temp		•				
	PH Coil DAT		•				
	Freezestat	•					
	Mixed Air Temp		•				
	Return Air Temp		•				
	Return Air Humidity		•				
	Return Air CO2		•				
	Space CO2		•				See Note 6
	CHW Valve				•		See Note 6
	CHWR Temp		•				
	HW Valve				•		See Note 4
	Economizer				•		
	OA Flow		•				
	Supply Hi Static	•					
	Supply Lo Static	•					
	Return Hi Static	•					
	Return Lo Static	•					
	Supply Air Flow		•				
	Return Air Flow		•				
	Smoke/Fire Alarm	•					
	Circ Pump S/S			•			See Note 7
	Circ Pump Status	•					See Note 7
	VFD Alarm/Fault					•	Interface Pt. (Typ. ea VFD)
	VFD Fault Code					•	Interface Pt. (Typ. ea VFD)
	VFD Spd Feedback					•	Interface Pt. (Typ. ea VFD)
	VFD KW					•	Interface Pt. (Typ. ea VFD)
	VFD In Bypass					•	Interface Pt. (Typ. ea VFD)
	Zone Humidity		•				
	UV Light Alarm	•					

LOGIC VARIABLES

BINARY	ANALOG	DESCRIPTION
Occ		ON WHEN OCCUPIED MODE ACTIVE
RUN		ON WHEN UNIT COMMANDED TO START
SGO		ON WHEN SUPPLY FAN ENERGIZED AND STATUS PROVEN
RGO		ON WHEN RETURN FAN ENERGIZED AND STATUS PROVEN
MAGO		ON WHEN OA CONDITIONS ALLOW ECONOMIZER CONTROL
SHPA		ON WHEN THE SUPPLY HI PRESSURE ALARM IS ACTIVE
SLPA		ON WHEN THE SUPPLY LO PRESSURE ALARM IS ACTIVE
FRZ		ON WHEN FREEZESTAT IS IN ALARM
Fire		ON WHEN FIRE ALARM IS ACTIVE
SFTY		ON WHEN UNIT SHUTDOWN ALARM IS ON
	HST	VARIABLE CALCULATED VALUE OF HIGHEST SPACE TEMPERATURE
	SCFM	VARIABLE VALUE OF SUPPLY AIR FLOW (CFM)
	OAT	VARIABLE VALUE OF OUTSIDE AIR TEMPERATURE
	SAT	VARIABLE VALUE OF SUPPLY AIR TEMPERATURE
	PHT	VARIABLE VALUE OF PREHEAT AIR TEMPERATURE
	MAT	VARIABLE VALUE OF MIXED AIR TEMPERATURE
	MINOA	VARIABLE VALUE OF MIN OA DAMPER POSITION (BASED ON OA FLOW PID OUT)
	DASP	VARIABLE CALCULATED VALUE OF DISCHARGE TEMPERATURE SETPOINT
	CPCT	VARIABLE CALCULATED VALUE OF CHW VALVE POSITION
	HPCT	VARIABLE CALCULATED VALUE OF HW VALVE POSITION
	EPCT	VARIABLE CALCULATED VALUE OF ECONOMIZER PID OUTPUT
	OAFLW	VARIABLE VALUE OF OUTSIDE AIR FLOW (CFM)
	RHP	VARIABLE CALCULATED VALUE OF CHW VALVE POSITION FOR DEHUMIDIFICATION
	OAFSP	VARIABLE CALCULATED VALUE OF OA FLOW SETPOINT

REVISIONS

NO.	DESCRIPTION	DATE

THE UNIVERSITY of NORTH CAROLINA at CHAPEL HILL

SINGLE DUCT VAV AH WITH PREHEAT, CHW COIL & RETURN FAN W/UNIT EXHAUST AT MIN OA FLOW

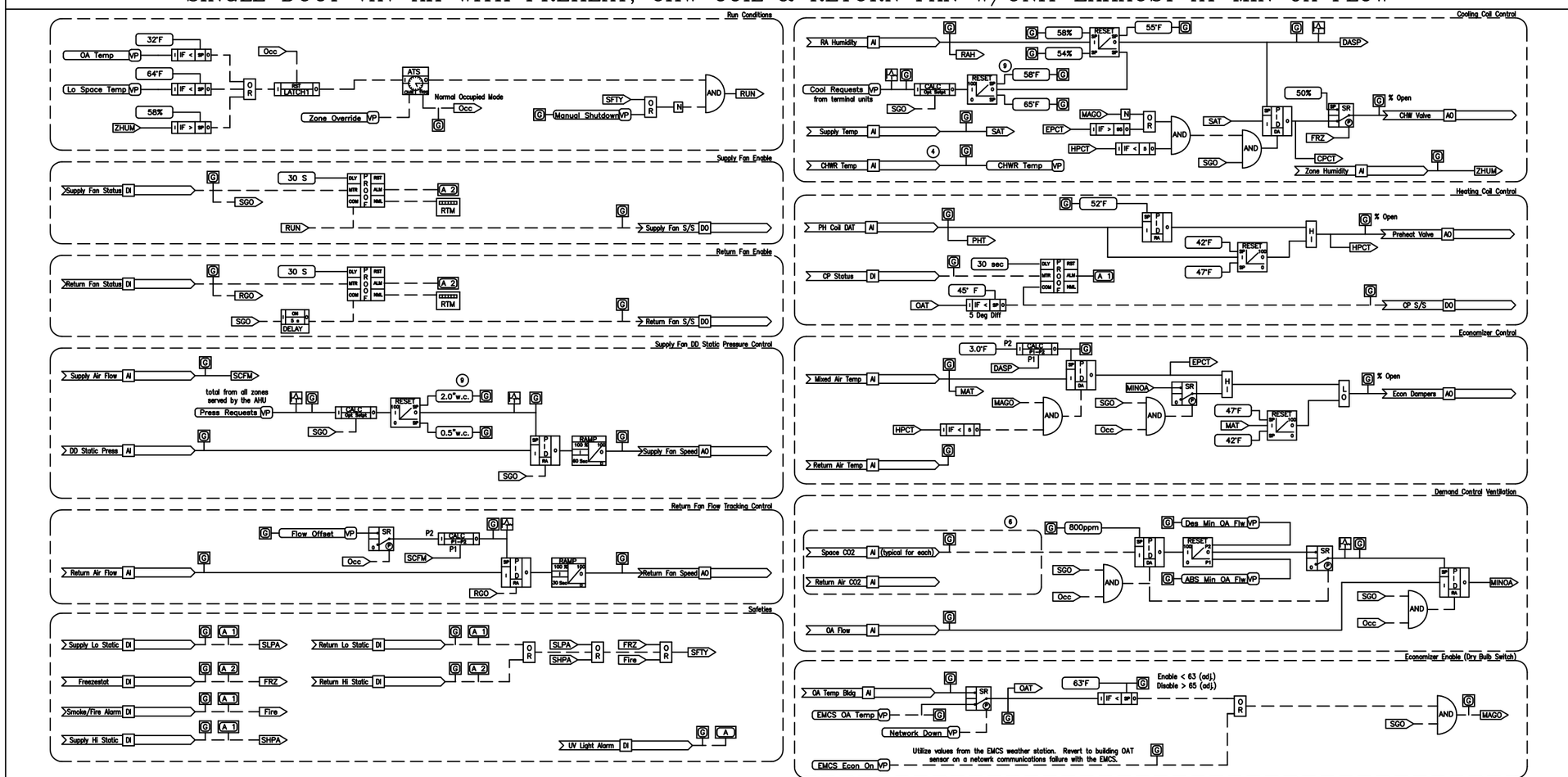

Software Logic Diagram

ELECTRIC LADDER DIAGRAMS

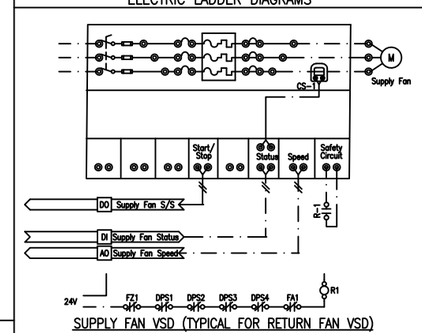

SUPPLY FAN VSD (TYPICAL FOR RETURN FAN VSD)

The University of North Carolina
Chapel Hill, North Carolina

Standard Control Drawings

Eng	RR
Drawn	BMV
Chkd	---
Appd	---
Issued	6/16/2021
Job No.	----
Scale	N/A
Proj Code	

REV. 2021

SINGLE DUCT VAV AH WITH PREHEAT, CHW COIL & RETURN FAN

00 OF 00
SHEET NUMBER

C1.01a
DWG NUMBER

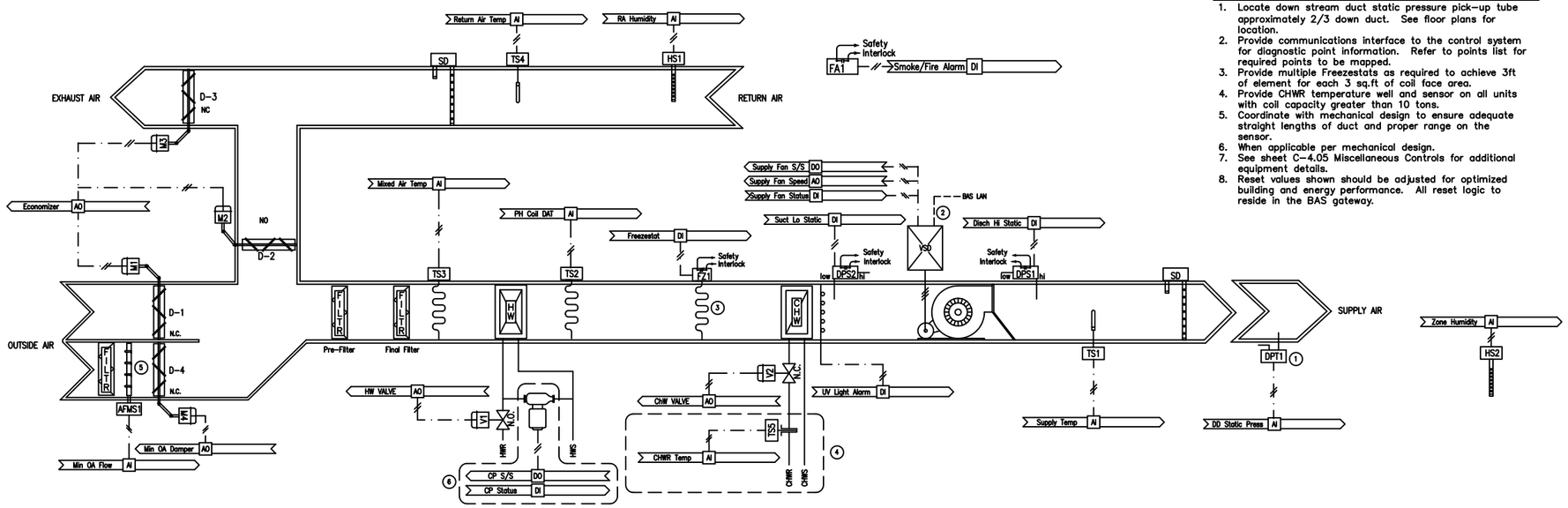

NOTES

1. Locate down stream duct static pressure pick-up tube approximately 2/3 down duct. See floor plans for location.
2. Provide communications interface to the control system for diagnostic point information. Refer to points list for required points to be mapped.
3. Provide multiple Freezestats as required to achieve 3ft of element for each 3 sq.ft of coil face area.
4. Provide CHWR temperature well and sensor on all units with coil capacity greater than 10 tons.
5. Coordinate with mechanical design to ensure adequate straight lengths of duct and proper range on the sensor.
6. When applicable per mechanical design.
7. See sheet C-4.05 Miscellaneous Controls for additional equipment details.
8. Reset values shown should be adjusted for optimized building and energy performance. All reset logic to reside in the BAS gateway.

SINGLE DUCT VAV AH WITH PREHEAT & CHW COIL, MIN OA DAMPER, NO RETURN FAN

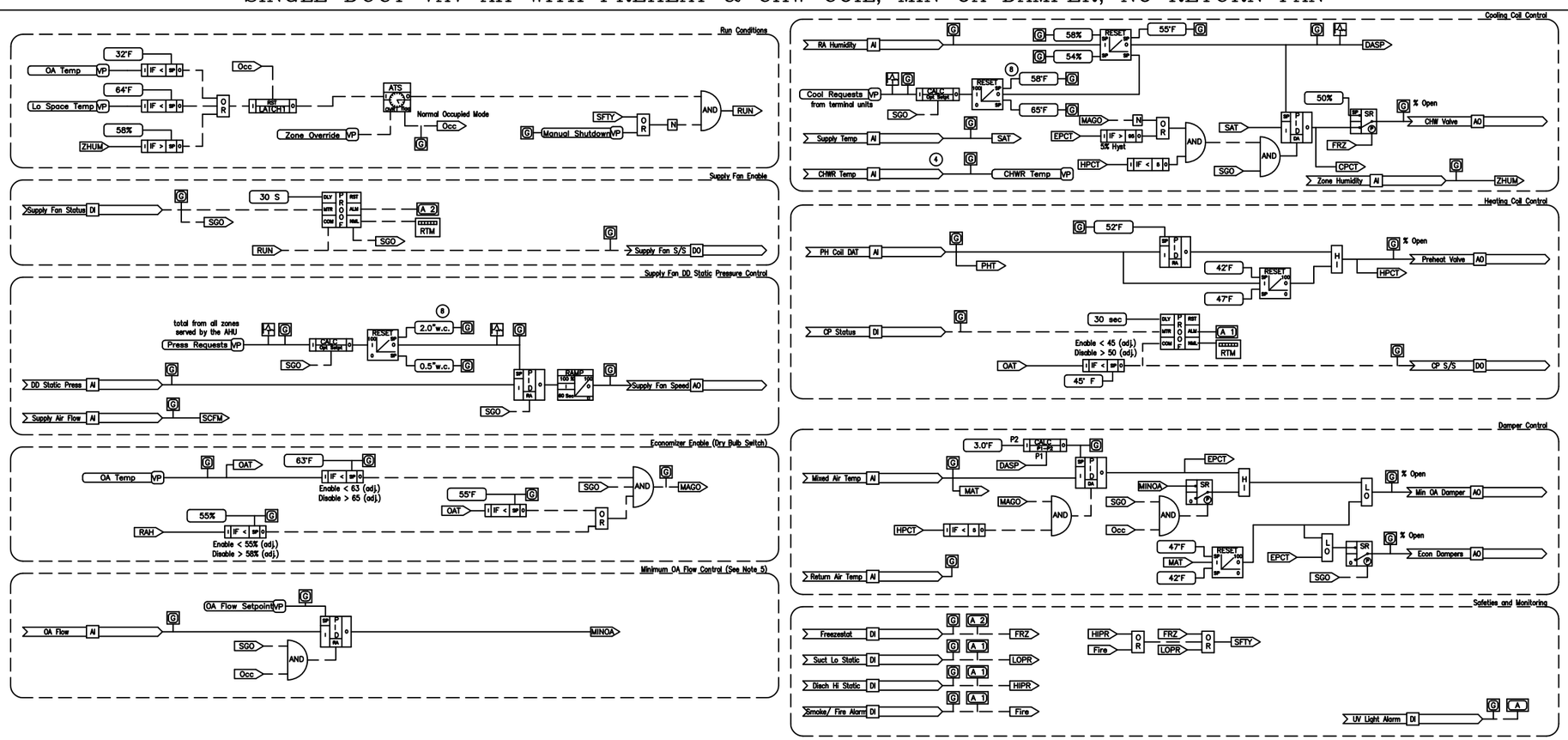

Software Logic Diagram

POINTS LIST

ADDRESS	POINT DESCRIPTOR	DI	AI	DO	AO	VP	REMARKS
	Supply Fan S/S			•			
	Supply Fan Status	•					
	Supply Fan Speed				•		
	DD Static Press		•				See Note 1
	Supply Temp		•				
	Supply Hi Static	•					
	Supply Lo Static	•					
	PH Coil DAT		•				
	Freezestat	•					
	Mixed Air Temp		•				
	Return Air Temp		•				
	CHW Valve				•		
	CHWR Temp		•				See Note 4
	HW Valve				•		
	Circ Pump S/S			•			See Note 6
	Circ Pump Status	•					See Note 6
	Economizer				•		
	Min OA Flow		•				
	Min OA Damper				•		
	Smoke/Fire Alarm	•					
	VFD Alarm/Fault					•	Interface Point
	VFD Fault Code					•	Interface Point
	VFD Spd Feedback					•	Interface Point
	VFD KW					•	Interface Point
	VFD In Bypass					•	Interface Point
	Return Air Humidity		•				
	Zone Humidity		•				
	UV Light Alarm	•					

LOGIC VARIABLES

BINARY	ANALOG	DESCRIPTION
Occ		ON WHEN OCCUPIED MODE ACTIVE
RUN		ON WHEN UNIT COMMANDED TO START
SGO		ON WHEN SUPPLY FAN ENERGIZED AND STATUS PROVEN
MAGO		ON WHEN OA CONDITIONS ALLOW ECONOMIZER CONTROL
HIPR		ON WHEN DISCHAREGE HIGH PRESSURE SWITCH IS IN ALARM
LOPR		ON WHEN SUCTION LOW PRESSURE SWITCH IS IN ALARM
FRZ		ON WHEN FREEZESTAT IS IN ALARM
Fire		ON WHEN FIRE ALARM IS ACTIVE
SFTY		ON WHEN SHUTDOWN SAFETY IS ON
	HST	VARIABLE CALCULATED VALUE OF HIGHEST SPACE TEMPERATURE
	OAT	VARIABLE VALUE OF OUTSIDE AIR TEMPERATURE
	SAT	VARIABLE VALUE OF SUPPLY AIR TEMPERATURE
	PHT	VARIABLE VALUE OF PREHEAT AIR TEMPERATURE
	MAT	VARIABLE VALUE OF MIXED AIR TEMPERATURE
	DASP	VARIABLE CALCULATED VALUE OF DISCHARGE TEMPERATURE SETPOINT
	CPCT	VARIABLE CALCULATED VALUE OF CHW VALVE POSITION
	HPCT	VARIABLE CALCULATED VALUE OF HW VALVE POSITION
	EPCT	VARIABLE CALCULATED VALUE OF ECONOMIZER PID OUTPUT
	MINOA	VARIABLE CALCULATED VALUE OF MINIMUM OA DAMPER POSITION

ELECTRIC LADDER DIAGRAMS

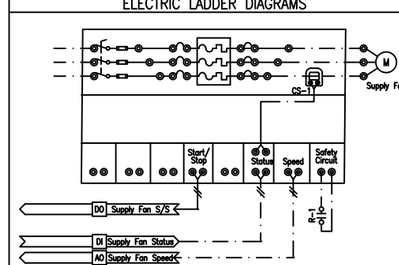

SUPPLY FAN VSD

SAFETY INTERLOCK DETAIL

REVISIONS

NO.	DESCRIPTION	DATE

THE UNIVERSITY of NORTH CAROLINA at CHAPEL HILL

The University of North Carolina
Chapel Hill, North Carolina

Standard Control Drawings

Eng	RR
Drawn	RR
Chkd	---
Appd	---
Issued	6/16/2021
Job No.	----
Scale	N/A
Proj Code	

REV. 2021

SINGLE DUCT VAV AH WITH PREHEAT & CHW COIL, MIN OA DAMPER, NO RETURN FAN

00 OF 00
SHEET NUMBER

C-1.02
DWG NUMBER

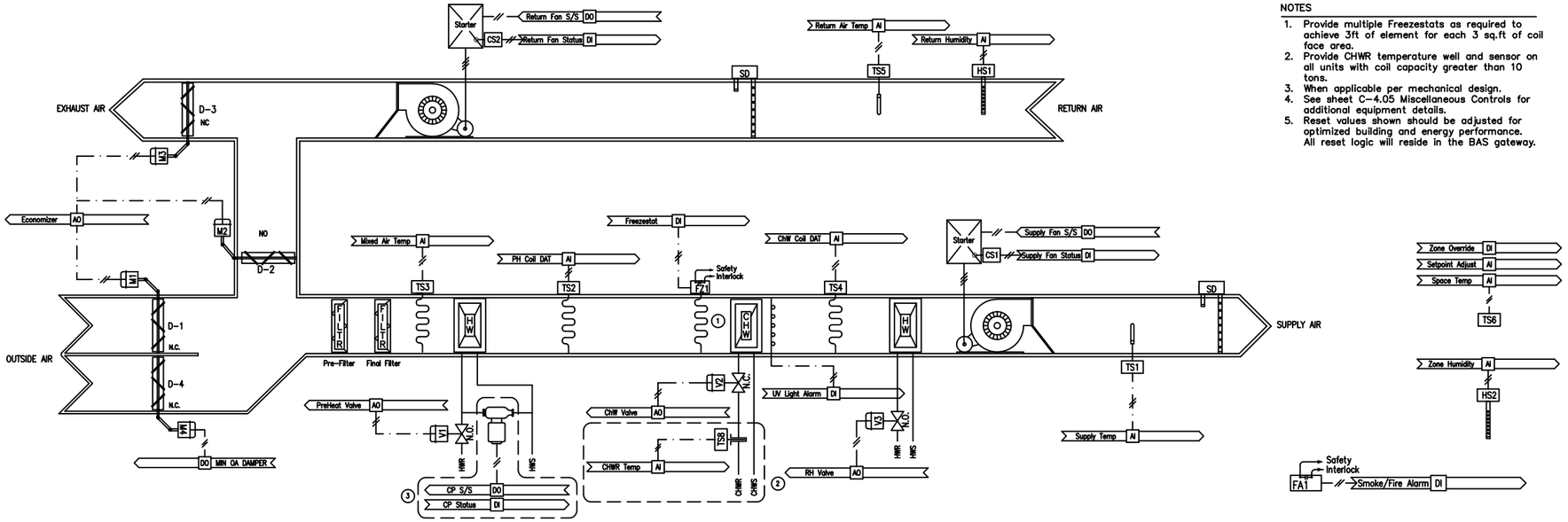

NOTES

1. Provide multiple Freezestats as required to achieve 3ft of element for each 3 sq.ft of coil face area.
2. Provide CHWR temperature well and sensor on all units with coil capacity greater than 10 tons.
3. When applicable per mechanical design.
4. See sheet C-4.05 Miscellaneous Controls for additional equipment details.
5. Reset values shown should be adjusted for optimized building and energy performance. All reset logic will reside in the BAS gateway.

SINGLE DUCT CV AH WITH PREHEAT, CHW & REHEAT COIL, MIN OA DAMPER & RETURN FAN

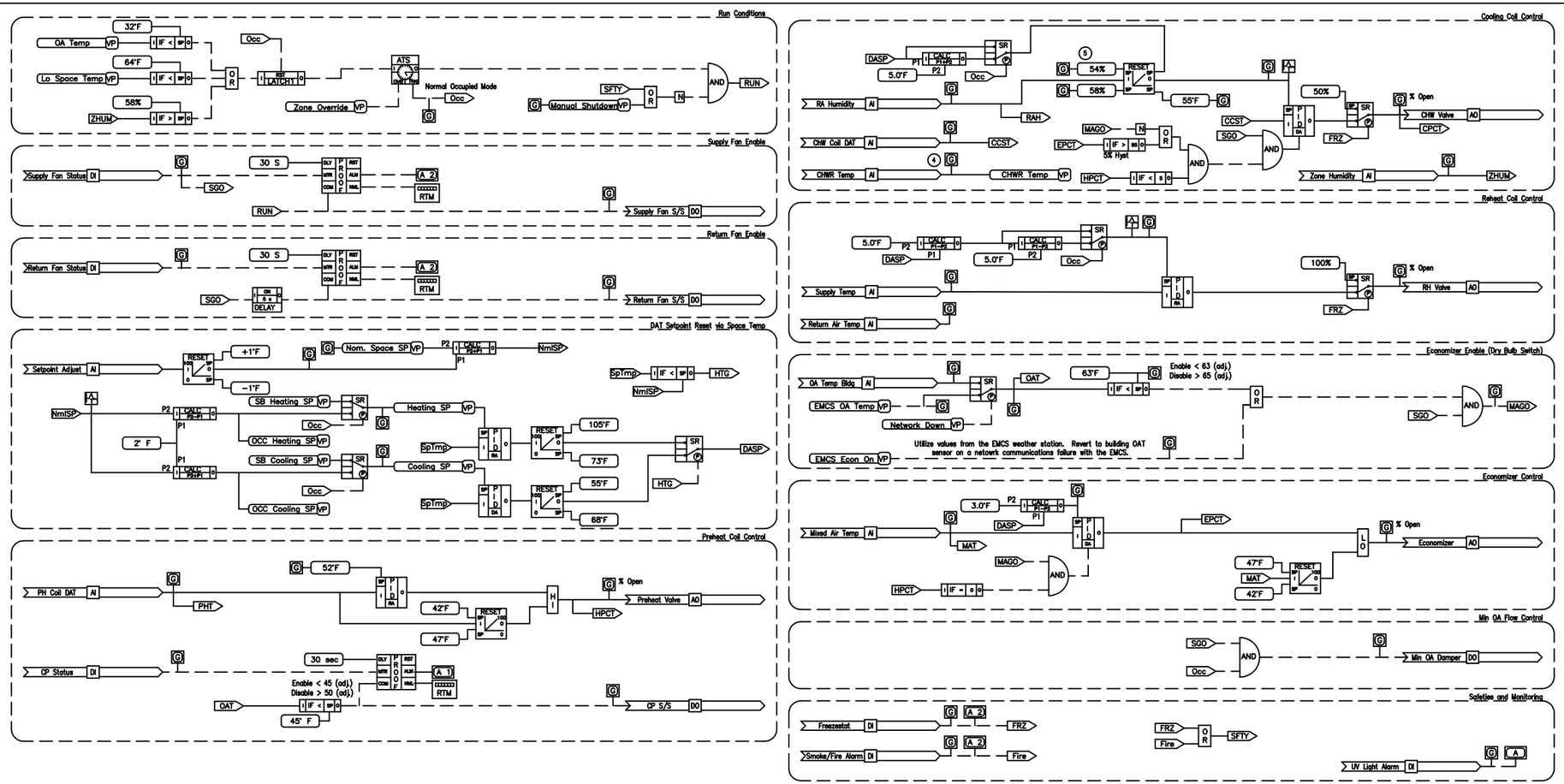

Software Logic Diagram

POINTS LIST

ADDRESS	POINT DESCRIPTOR	POINT TYPE DI	AI	DO	AO	VP	REMARKS
	Supply Fan S/S			•			
	Supply Fan Status	•					
	Return Fan S/S			•			
	Return Fan Status	•					
	Supply Temp		•				
	PH Coil DAT		•				
	Freezestat	•					
	Mixed Air Temp		•				
	ChW Coil DAT		•				
	Space Temp		•				
	Setpoint Adjust		•				
	Zone Override	•					
	Return Air Temp		•				
	RA Humidity		•				
	PreHeat Valve				•		
	Circ Pump S/S			•			See Note 3
	Circ Pump Status	•					See Note 3
	CHW Valve				•		
	RH Valve				•		
	Economizer				•		
	Min OA Damper			•			
	CHWR Temp		•				See Note 2
	Smoke/Fire Alarm	•					
	Zone Humidity		•				
	UV Light Alarm	•					

LOGIC VARIABLES

BINARY	ANALOG	DESCRIPTION
Occ		ON WHEN OCCUPIED MODE ACTIVE
RUN		ON WHEN UNIT COMMANDED TO START
SGO		ON WHEN SUPPLY FAN ENERGIZED AND STATUS PROVEN
MAGO		ON WHEN OA CONDITIONS ALLOW ECONOMIZER CONTROL
HTG		ON WHEN SPACE TEMPERATURE LOWER THAN NORMAL SPACE SETPOINT
FRZ		ON WHEN FREEZESTAT IS IN ALARM
Fire		ON WHEN FIRE ALARM IS ACTIVE
SFTY		ON WHEN ANY UNIT SHUTDOWN SAFETY IS ON
	SpTmp	VARIABLE VALUE OF SPACE TEMPERATURE
	NmlSP	VARIABLE CALCULATED VALUE OF NORMAL SPACE TEMPERATURE SETPOINT
	OAT	VARIABLE VALUE OF OUTSIDE AIR TEMPERATURE
	SAT	VARIABLE VALUE OF SUPPLY AIR TEMPERATURE
	PHT	VARIABLE VALUE OF PREHEAT AIR TEMPERATURE
	MAT	VARIABLE VALUE OF MIXED AIR TEMPERATURE
	DASP	VARIABLE CALCULATED VALUE OF DISCHARGE TEMPERATURE SETPOINT
	CPCT	VARIABLE CALCULATED VALUE OF CHW VALVE POSITION
	HPCT	VARIABLE CALCULATED VALUE OF HW VALVE POSITION
	EPCT	VARIABLE CALCULATED VALUE OF ECONOMIZER PID OUTPUT
	CCST	VARIABLE VALUE OF COOLING COIL SUPPLY AIR TEMPERATURE
	DHSP	VARIABLE VALUE OF DEHUMIDIFICATION SETPOINT
	RAH	VARIABLE VALUE OF RETURN AIR HUMIDITY

ELECTRIC LADDER DIAGRAMS

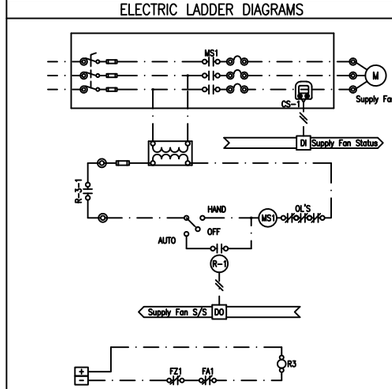

SUPPLY FAN STARTER (TYPICAL FOR RETURN FAN STARTER)

REVISIONS

NO.	DESCRIPTION	DATE

THE UNIVERSITY of NORTH CAROLINA at CHAPEL HILL

The University of North Carolina
Chapel Hill, North Carolina

Standard Control Drawings

Eng	RR
Drawn	RR
Chkd	---
Appd	---
Issued	6/15/2021
Job No.	---
Scale	N/A
Proj Code	

REV. 2021

SINGLE DUCT CV AH WITH PREHEAT, CHW & REHEAT COIL, MIN OA DAMPER & RETURN FAN

00 OF 00
SHEET NUMBER

C-1.03
DWG NUMBER

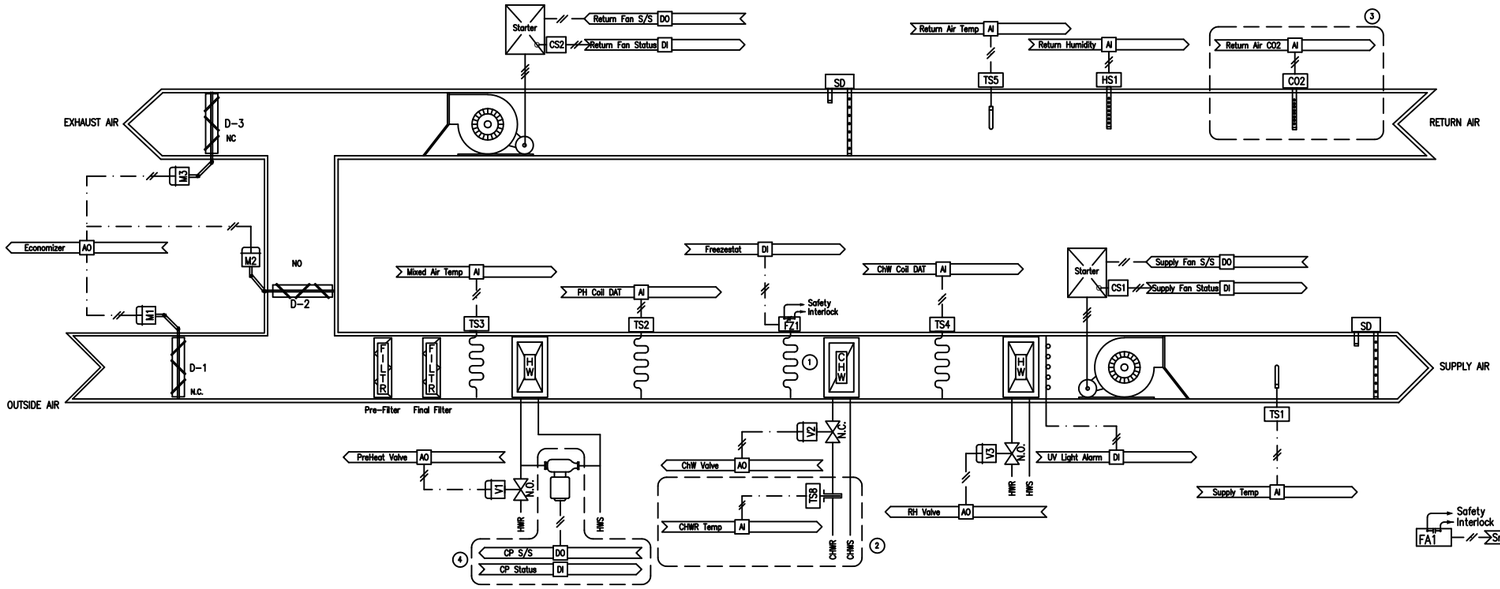

NOTES

1. Provide multiple Freezestats as required to achieve 3ft of element for each 3 sq.ft of coil face area.
2. Provide CHWR temperature well and sensor on all units with coil capacity greater than 10 tons.
3. Provide Return Air or Space CO2 sensors as directed.
4. When applicable per mechanical design.
5. See sheet C-4.05 Miscellaneous Controls for additional equipment details.
6. Reset values shown should be adjusted for optimized building and energy performance. All reset logic will reside in the BAS gateway.

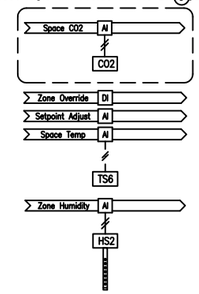

SINGLE DUCT CV AH WITH PREHEAT, CHW & REHEAT COIL, CO2 VENTILATION & RETURN FAN

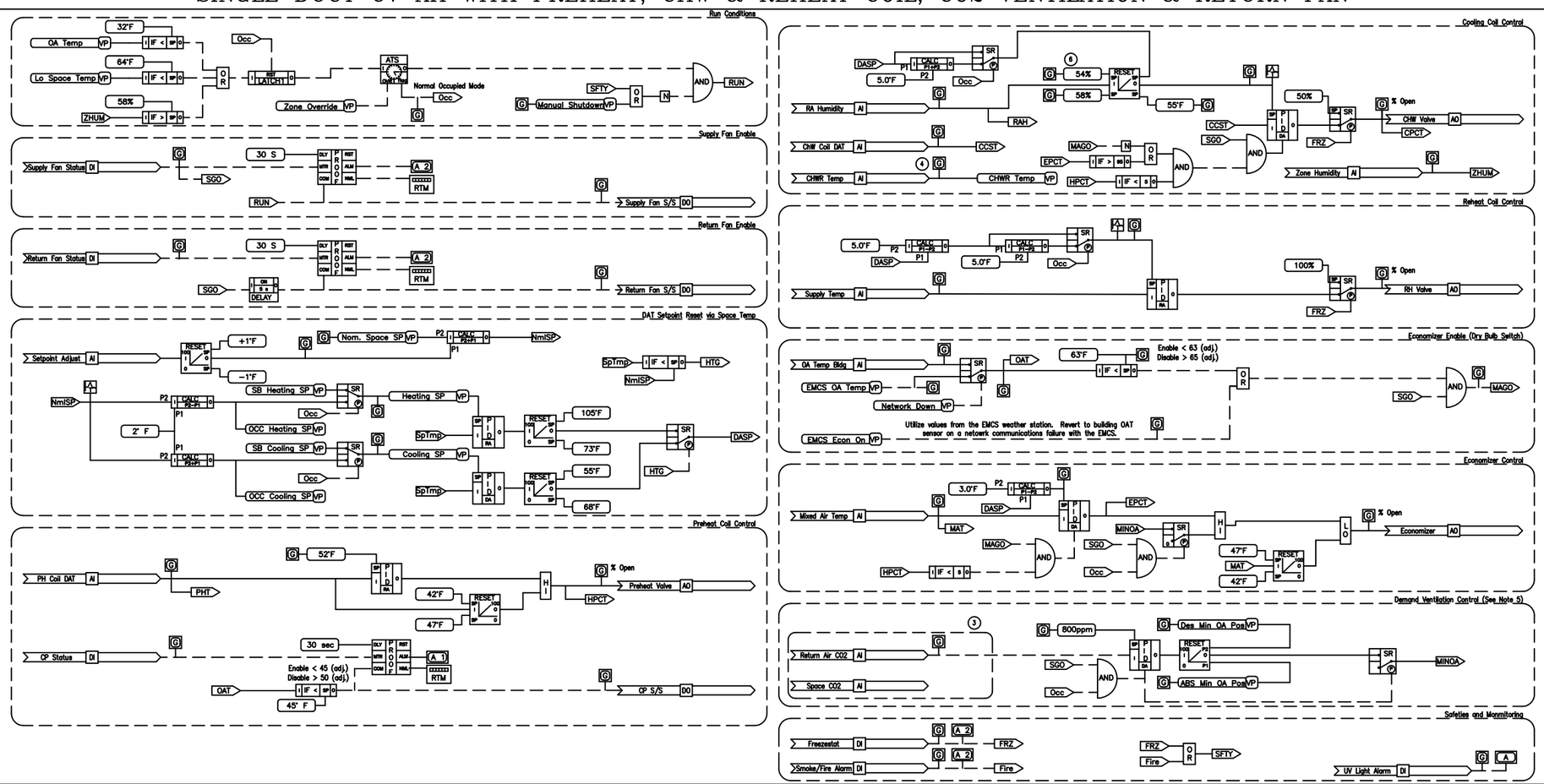

Software Logic Diagram

POINTS LIST

ADDRESS	POINT DESCRIPTOR	DI	AI	DO	AO	VP	REMARKS
	Supply Fan S/S			•			
	Supply Fan Status	•					
	Return Fan S/S			•			
	Return Fan Status	•					
	Supply Temp		•				
	PH Coil DAT		•				
	Freezestat	•					
	Mixed Air Temp		•				
	ChW Coil DAT		•				
	Space Temp		•				
	Setpoint Adjust		•				
	Zone Override	•					
	Return Air Temp		•				
	RA Humidity		•				
	PreHeat Valve				•		
	Circ Pump S/S			•			See Note 4
	Circ Pump Status	•					See Note 4
	CHW Valve				•		
	RH Valve				•		
	Economizer				•		
	Space/Return CO2		•				See Note 3
	CHWR Temp		•				See Note 2
	Fire Alarm	•					
	Zone Humidity		•				
	UV Light Alarm	•					

LOGIC VARIABLES

BINARY	ANALOG	DESCRIPTION
Occ		ON WHEN OCCUPIED MODE ACTIVE
RUN		ON WHEN UNIT COMMANDED TO START
SGO		ON WHEN SUPPLY FAN ENERGIZED AND STATUS PROVEN
MAGO		ON WHEN OA CONDITIONS ALLOW ECONOMIZER CONTROL
DHUM		ON WHEN RA HUMIDITY LOWER THAN DEHUMIDIFICATION SETPOINT
HTG		ON WHEN SPACE TEMPERATURE LOWER THAN NORMAL SPACE SETPOINT
FRZ		ON WHEN FREEZESTAT IS IN ALARM
Fire		ON WHEN FIRE ALARM IS ACTIVE
SFTY		ON WHEN UNIT SHUTDOWN ALARM IS ON
	SpTmp	VARIABLE VALUE OF SPACE TEMPERATURE
	NmlSP	VARIABLE CALCULATED VALUE OF NORMAL SPACE TEMPERATURE SETPOINT
	OAT	VARIABLE VALUE OF OUTSIDE AIR TEMPERATURE
	SAT	VARIABLE VALUE OF SUPPLY AIR TEMPERATURE
	PHT	VARIABLE VALUE OF PREHEAT AIR TEMPERATURE
	MAT	VARIABLE VALUE OF MIXED AIR TEMPERATURE
	DASP	VARIABLE CALCULATED VALUE OF DISCHARGE TEMPERATURE SETPOINT
	CPCT	VARIABLE CALCULATED VALUE OF CHW VALVE POSITION
	HPCT	VARIABLE CALCULATED VALUE OF HW VALVE POSITION
	EPCT	VARIABLE CALCULATED VALUE OF ECONOMIZER PID OUTPUT
	CCST	VARIABLE VALUE OF COOLING COIL SUPPLY AIR TEMPERATURE
	DHSP	VARIABLE VALUE OF DEHUMIDIFICATION SETPOINT
	RAH	VARIABLE VALUE OF RETURN AIR HUMIDITY
	MINOA	VARIABLE CALCULATED VALUE OF MINIMUM ECON DAMPER POSITION

ELECTRIC LADDER DIAGRAMS

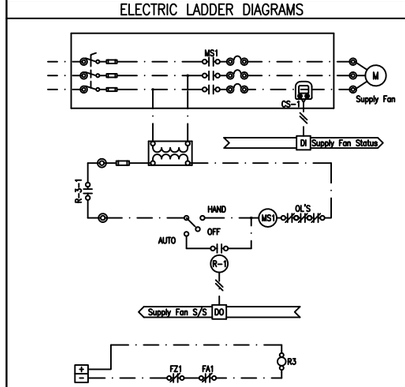

SUPPLY FAN VSD (TYPICAL FOR RETURN FAN VSD)

REVISIONS

NO.	DESCRIPTION	DATE

THE UNIVERSITY of NORTH CAROLINA at CHAPEL HILL

The University of North Carolina
Chapel Hill, North Carolina

Standard Control Drawings

Eng	RR
Drawn	RR
Chkd	---
Appd	---
Issued	9/16/2020
Job No.	----
Scale	N/A
Proj Code	

REV. 2021

SINGLE DUCT CV AH WITH PREHEAT, CHW & REHEAT COIL, CO2 VENTILATION & RETURN FAN

00 OF 00
SHEET NUMBER

C-1.04

DWG NUMBER

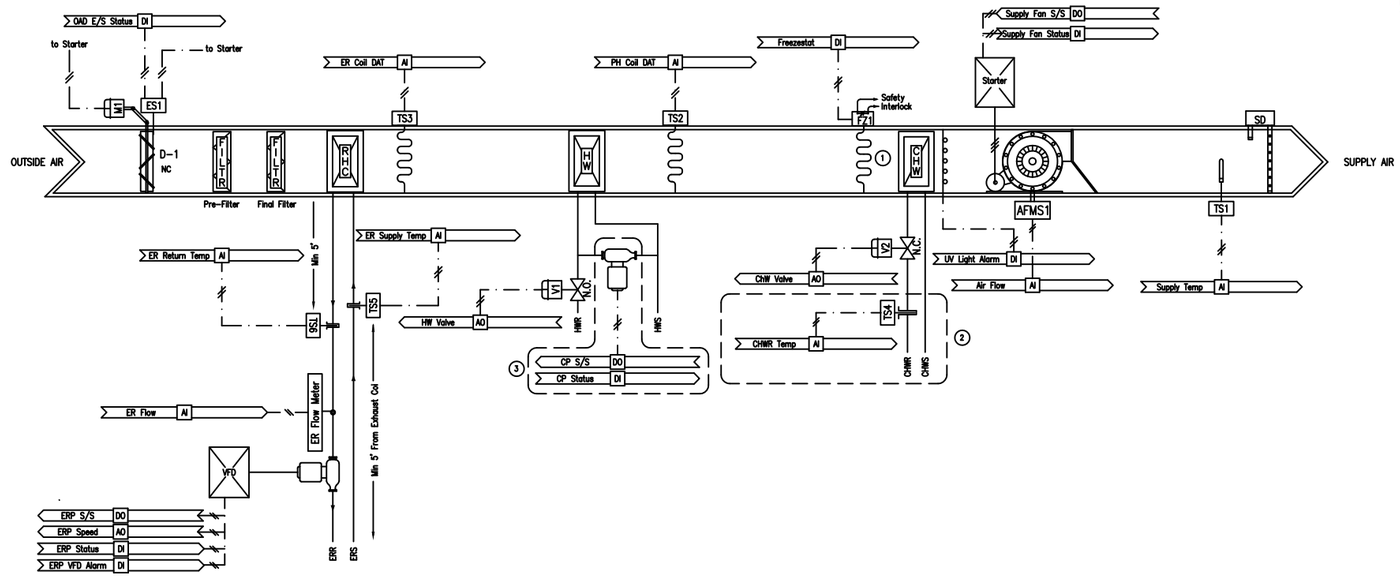

NOTES

1. Provide multiple Freezestats as required to achieve 3ft of element for each 3 sq.ft of coil face area.
2. Provide CHWR temperature well and sensor on all units with coil capacity greater than 10 tons.
3. Where applicable per mechanical design.
4. See sheet C-4.05 Miscellaneous Controls for additional equipment details.
5. Reset values shown should be adjusted for optimized building and energy performance. All reset logic will reside in the BAS gateway.

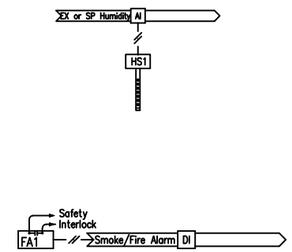

100% OA CV AH WITH HEAT RECOVERY, PREHEAT & CHW COIL

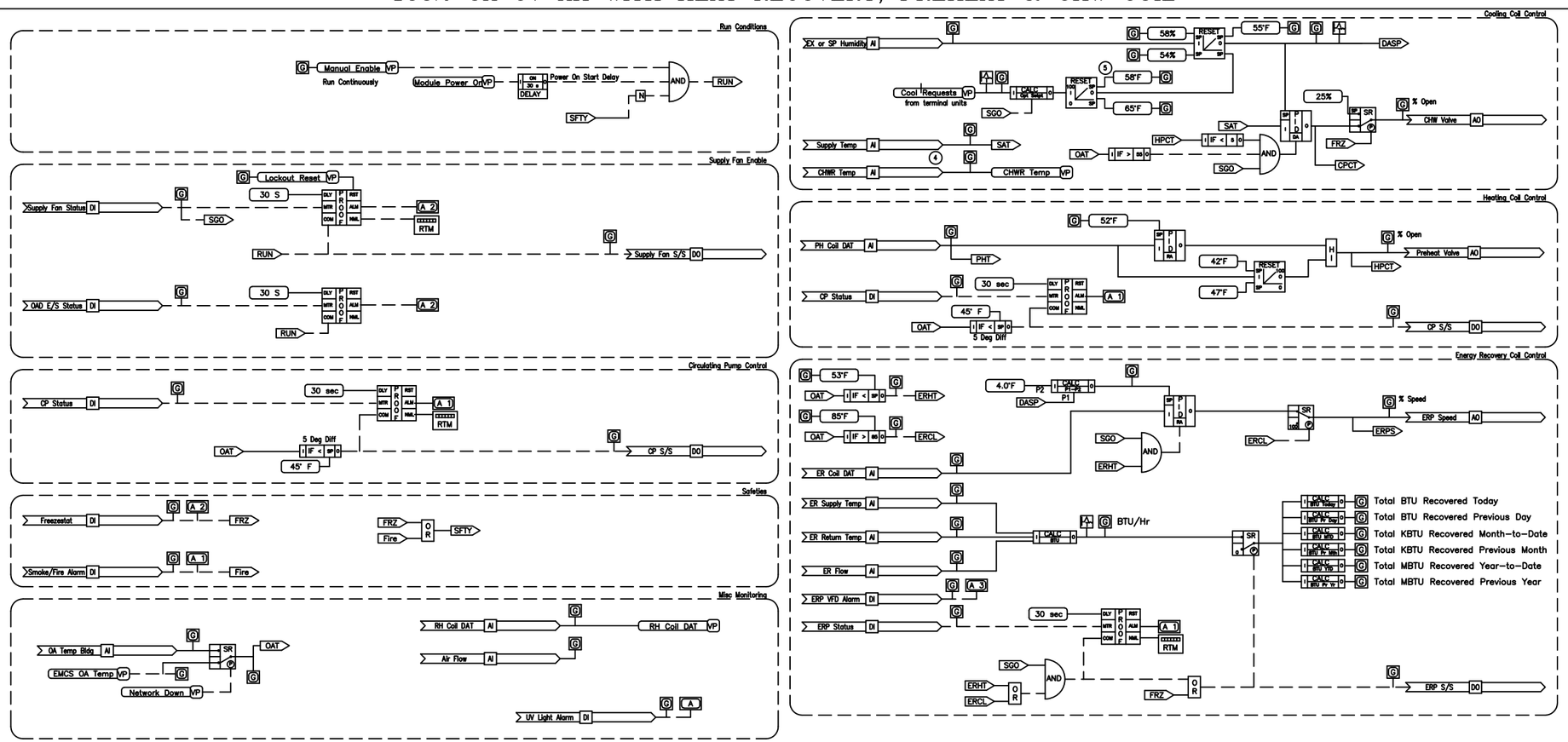

Software Logic Diagram

POINTS LIST

ADDRESS	POINT DESCRIPTOR	POINT TYPE DI	AI	DO	AO	VP	REMARKS
	Supply Fan S/S			•			
	Supply Fan Status	•					
	Air Flow		•				
	Supply Temp		•				
	PH Coil DAT		•				
	Freezestat	•					
	OAD E/S Status	•					
	ER Coil DAT		•				
	CHWR Temp		•				See Note 2
	CHW Valve				•		
	HW Valve				•		
	Circ Pump S/S			•			
	Circ Pump Status	•					
	Fire Alarm	•					
	ER Pump S/S			•			
	ER Pump Status	•					
	ERP VFD Alarm	•					
	ERP Speed				•		
	ER Supply Temp		•				
	ER Return Temp		•				
	ER Flow		•				
	EX or SP Humidity		•				
	UV Light Alarm	•					

LOGIC VARIABLES

BINARY	ANALOG	DESCRIPTION
Occ		ON WHEN OCCUPIED MODE ACTIVE
RUN		ON WHEN UNIT COMMANDED TO START
SGO		ON WHEN SUPPLY FAN ENERGIZED AND STATUS PROVEN
SMK		ON WHEN SMOKE DETECTOR IS IN ALARM
FRZ		ON WHEN FREEZESTAT IS IN ALARM
Fire		ON WHEN FIRE ALARM IS ACTIVE
SFTY		ON WHEN "FRZ", "Fire" OR "SMK" ARE ON
	HST	VARIABLE CALCULATED VALUE OF HIGHEST SPACE TEMPERATURE
	OAT	VARIABLE VALUE OF OUTSIDE AIR TEMPERATURE
	SAT	VARIABLE VALUE OF SUPPLY AIR TEMPERATURE
	PHT	VARIABLE VALUE OF PREHEAT AIR TEMPERATURE
	CPCT	VARIABLE CALCULATED VALUE OF CHW VALVE POSITION
	HPCT	VARIABLE CALCULATED VALUE OF HW VALVE POSITION
	ERPS	VARIABLE CALCULATED VALUE OF ENERGY RECOVERY PUMP SPEED
ERHT		ON WHEN ENERGY RECOVERY SYSTEM ENABLED IN HEATING MODE
ERCL		ON WHEN ENERGY RECOVERY SYSTEM ENABLED IN COOLING MODE

ELECTRIC LADDER DIAGRAMS

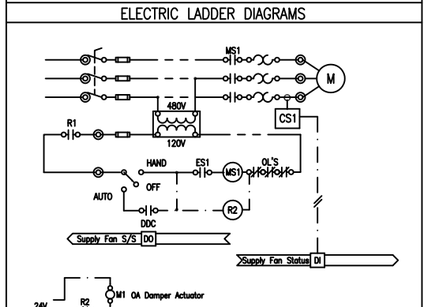

SUPPLY FAN STARTER

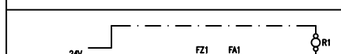

SAFETY INTERLOCK DETAIL

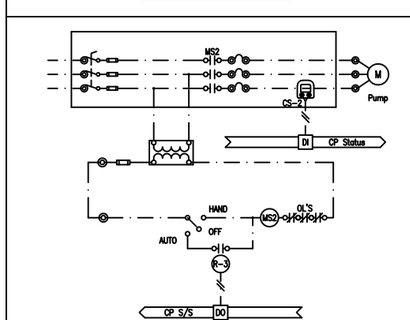

CIRCULATING PUMP STARTER

REVISIONS

NO.	DESCRIPTION	DATE

THE UNIVERSITY of NORTH CAROLINA at CHAPEL HILL

The University of North Carolina
Chapel Hill, North Carolina

Standard Control Drawings

Eng	RR
Drawn	RR
Chkd	---
Appd	---
Issued	6/16/2021
Job No.	----
Scale	N/A
Proj Code	

REV. 2021

100% OA CV AH WITH HEAT RECOVERY, PREHEAT & CHW COIL

00 OF 00
SHEET NUMBER

C-1.05

DWG NUMBER

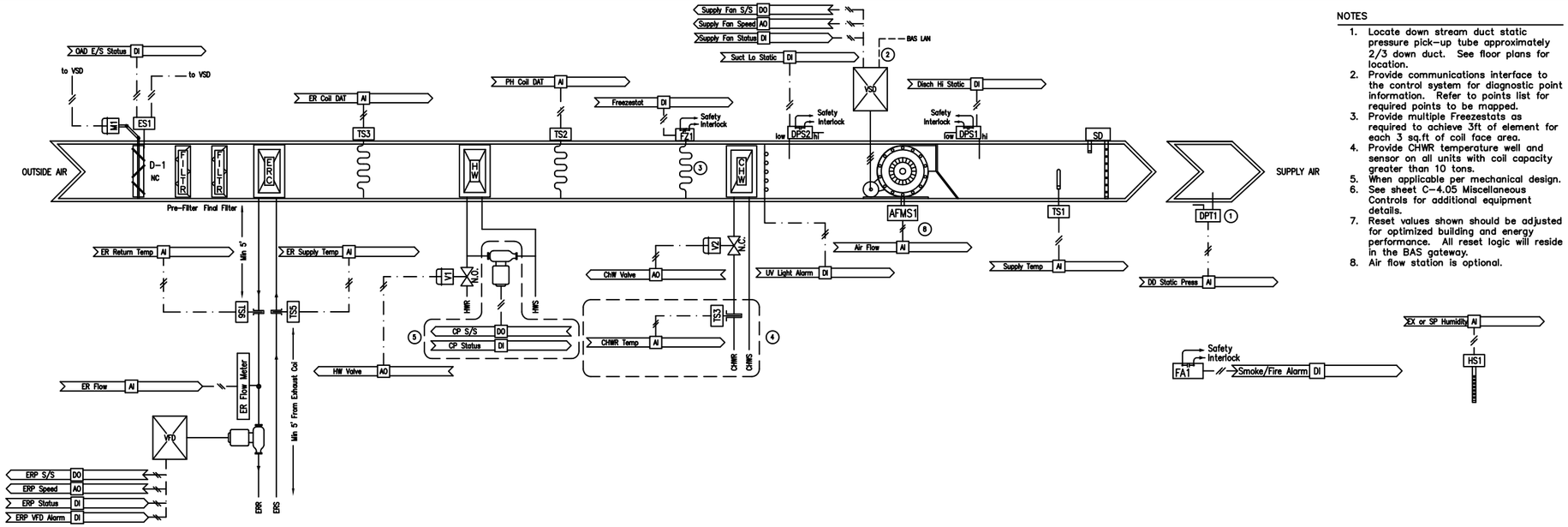

NOTES

1. Locate down stream duct static pressure pick-up tube approximately 2/3 down duct. See floor plans for location.
2. Provide communications interface to the control system for diagnostic point information. Refer to points list for required points to be mapped.
3. Provide multiple Freezestats as required to achieve 3ft of element for each 3 sq.ft of coil face area.
4. Provide CHWR temperature well and sensor on all units with coil capacity greater than 10 tons.
5. When applicable per mechanical design.
6. See sheet C-4.05 Miscellaneous Controls for additional equipment details.
7. Reset values shown should be adjusted for optimized building and energy performance. All reset logic will reside in the BAS gateway.
8. Air flow station is optional.

100% OA VAV AH WITH PREHEAT & CHW COIL

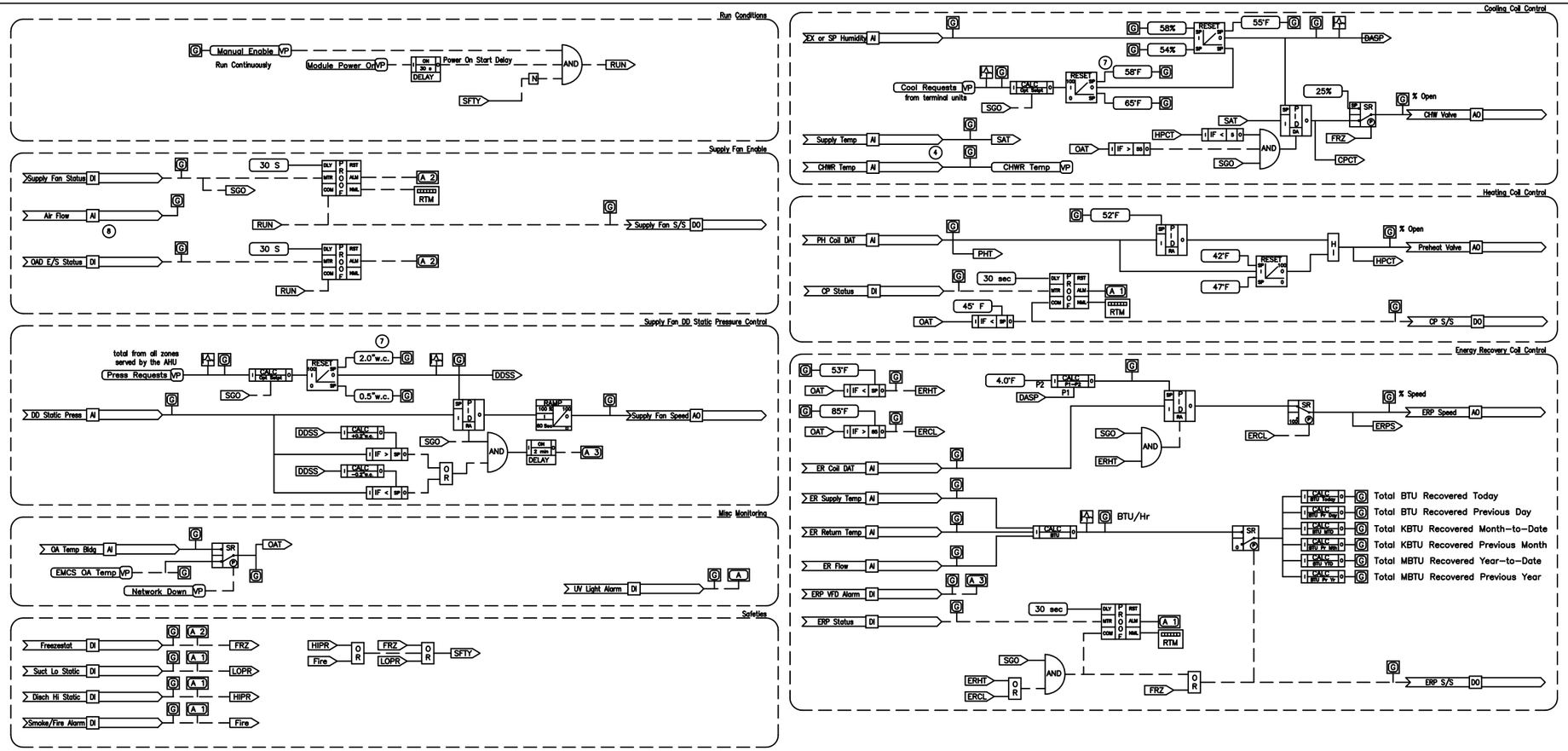

Software Logic Diagram

POINTS LIST

ADDRESS	POINT DESCRIPTOR	DI	AI	DO	AO	VP	REMARKS
	Supply Fan S/S			•			
	Supply Fan Status	•					
	Supply Fan Speed				•		
	DD Static Press		•				
	Supply Temp		•				
	Air Flow		•				
	Disch Hi Static	•					
	Suct Lo Static	•					
	PH Coil DAT		•				
	Freezestat	•					
	OAD E/S Status	•					
	ER Coil DAT		•				
	CHW Valve				•		
	HW Valve				•		
	Circ Pump S/S			•			See Note 5
	Circ Pump Status	•					See Note 5
	Smoke/Fire Alarm	•					
	VFD Alarm/Fault					•	Interface Point
	VFD Fault Code					•	Interface Point
	VFD Spd Feedback					•	Interface Point
	VFD KW					•	Interface Point
	VFD In Bypass					•	Interface Point
	ER Pump S/S					•	
	ER Pump Status			•			
	ERP VFD Alarm			•			
	ERP Speed						•
	ER Supply Temp				•		
	ER Return Temp				•		
	ER Flow				•		
	ChW Return Temp				•		
	EX or SP Humidity				•		

LOGIC VARIABLES

BINARY	ANALOG	DESCRIPTION
Occ		ON WHEN OCCUPIED MODE ACTIVE
RUN		ON WHEN UNIT COMMANDED TO START
SGO		ON WHEN SUPPLY FAN ENERGIZED AND STATUS PROVEN
HIPR		ON WHEN HIGH STATIC PRESSURE SWITCH IS IN ALARM
LOPR		ON WHEN LOW STATIC PRESSURE SWITCH IS IN ALARM
FRZ		ON WHEN FREEZESTAT IS IN ALARM
Fire		ON WHEN FIRE ALARM IS ACTIVE
SFTY		ON WHEN ANY UNIT SHUTDOWN SAFETY IS ON
	HST	VARIABLE CALCULATED VALUE OF HIGHEST SPACE TEMPERATURE
	OAT	VARIABLE CALCULATED VALUE OF OUTSIDE AIR TEMPERATURE
	SAT	VARIABLE CALCULATED VALUE OF SUPPLY AIR TEMPERATURE
	PHT	VARIABLE CALCULATED VALUE OF PREHEAT AIR TEMPERATURE
	CPCT	VARIABLE CALCULATED VALUE OF CHW VALVE POSITION
	HPCT	VARIABLE CALCULATED VALUE OF HW VALVE POSITION
	DDSS	VARIABLE CALCULATED VALUE OF DOWN DUCT STATIC PRESSURE SETPOINT
	ERPS	VARIABLE CALCULATED VALUE OF ENERGY RECOVERY PUMP SPEED
ERHT		ON WHEN ENERGY RECOVERY SYSTEM ENABLED IN HEATING MODE
ERCL		ON WHEN ENERGY RECOVERY SYSTEM ENABLED IN COOLING MODE

ELECTRIC LADDER DIAGRAMS

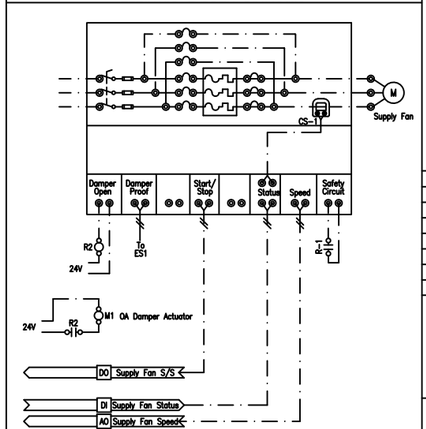

SUPPLY FAN VSD

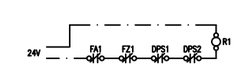

SAFETY INTERLOCK DETAIL

REVISIONS

NO.	DESCRIPTION	DATE

THE UNIVERSITY of NORTH CAROLINA at CHAPEL HILL

The University of North Carolina
Chapel Hill, North Carolina

Standard Control Drawings

Eng	RR
Drawn	RR
Chkd	
Appd	---
Issued	6/15/2020
Job No.	----
Scale	N/A
Proj Code	

REV.2021

100% OA VAV AH WITH PREHEAT & CHW COIL

00 OF 00
SHEET NUMBER

C-1.06

DWG NUMBER

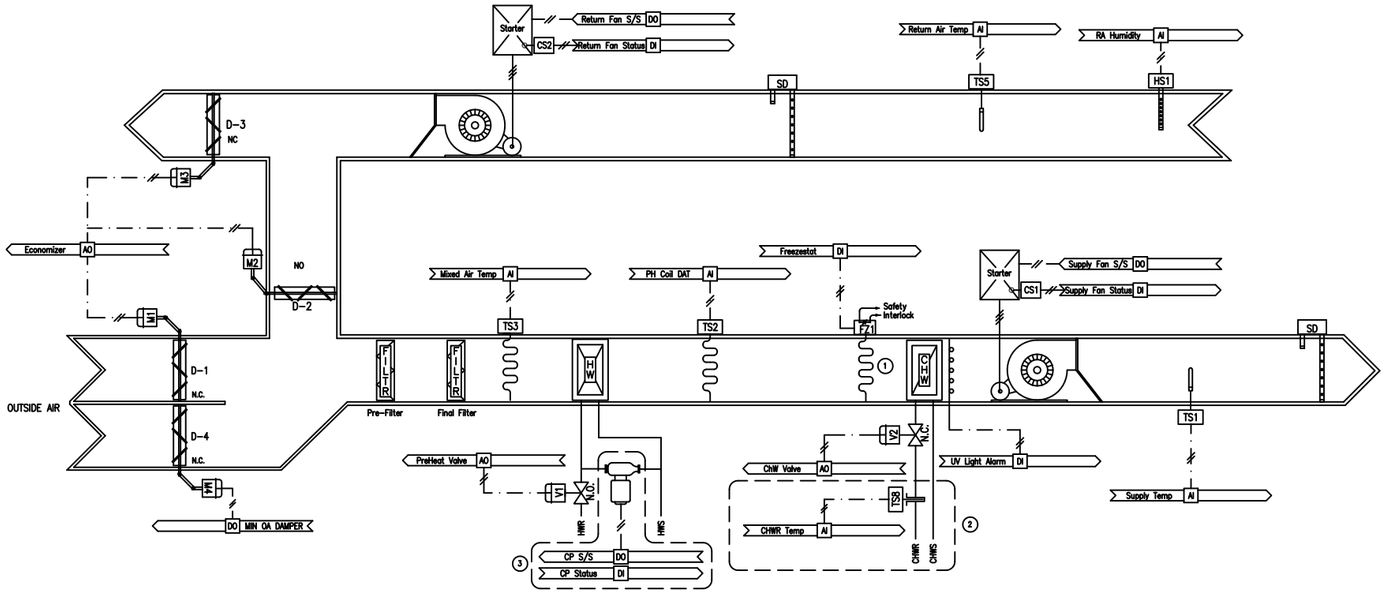

NOTES

1. Provide multiple Freezestats as required to achieve 3ft of element for each 3 sq.ft of coil face area.
2. Provide CHWR temperature well and sensor on all units with coil capacity greater than 10 tons.
3. When applicable per mechanical design.
4. See sheet C-4.05 Miscellaneous Controls for additional equipment details.
5. Reset values shown should be adjusted for optimized building and energy performance. All reset logic will reside in the BAS gateway.

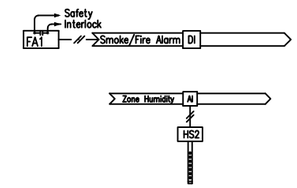

SINGLE DUCT CV AH WITH PREHEAT & CHW COIL, MIN OA DAMPER & RETURN FAN

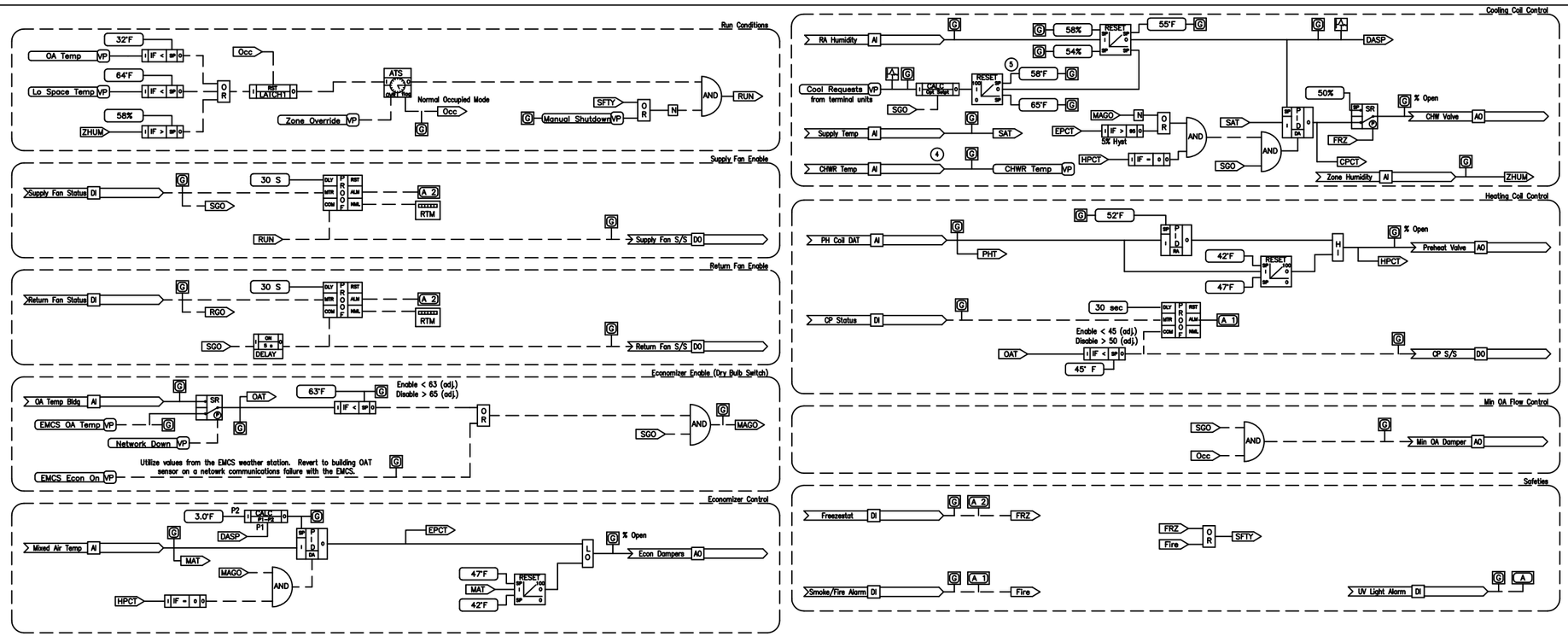

Software Logic Diagram

POINTS LIST

ADDRESS	POINT DESCRIPTOR	DI	AI	DO	AO	VP	REMARKS
	Supply Fan S/S			•			
	Supply Fan Status	•					
	Return Fan S/S			•			
	Return Fan Status	•					
	Supply Temp		•				
	PH Coil DAT		•				
	Freezestat	•					
	Mixed Air Temp		•				
	Return Air Temp		•				
	PreHeat Valve				•		
	Circ Pump S/S			•			See Note 3
	Circ Pump Status	•					See Note 3
	CHW Valve				•		
	Economizer				•		
	Min OA Damper			•			
	CHWR Temp		•				See Note 2
	Smoke/Fire Alarm	•					
	RA Humidity		•				
	Zone Humidity		•				
	UV Light Alarm	•					

LOGIC VARIABLES

BINARY	ANALOG	DESCRIPTION
Occ		ON WHEN OCCUPIED MODE ACTIVE
RUN		ON WHEN UNIT COMMANDED TO START
SBH		ON WHEN SETBACK HEATING MODE ACTIVE
SBC		ON WHEN SETBACK COOLING MODE ACTIVE
WUP		ON WHEN WARM-UP MODE ACTIVE
CDN		ON WHEN COOL-DOWN MODE ACTIVE
SGO		ON WHEN SUPPLY FAN ENERGIZED AND STATUS PROVEN
MAGO		ON WHEN OA CONDITIONS ALLOW ECONOMIZER CONTROL
FRZ		ON WHEN FREEZESTAT IS IN ALARM
Fire		ON WHEN FIRE ALARM IS ACTIVE
SFTY		ON WHEN ANY UNIT SHUTDOWN SAFETY IS ON
	HST	VARIABLE CALCULATED VALUE OF HIGHEST SPACE TEMPERATURE
	OAT	VARIABLE VALUE OF OUTSIDE AIR TEMPERATURE
	SAT	VARIABLE VALUE OF SUPPLY AIR TEMPERATURE
	PHT	VARIABLE VALUE OF PREHEAT AIR TEMPERATURE
	MAT	VARIABLE VALUE OF MIXED AIR TEMPERATURE
	DASP	VARIABLE CALCULATED VALUE OF DISCHARGE TEMPERATURE SETPOINT
	CPCT	VARIABLE CALCULATED VALUE OF CHW VALVE POSITION
	HPCT	VARIABLE CALCULATED VALUE OF HW VALVE POSITION
	EPCT	VARIABLE CALCULATED VALUE OF ECONOMIZER PID OUTPUT

ELECTRIC LADDER DIAGRAMS

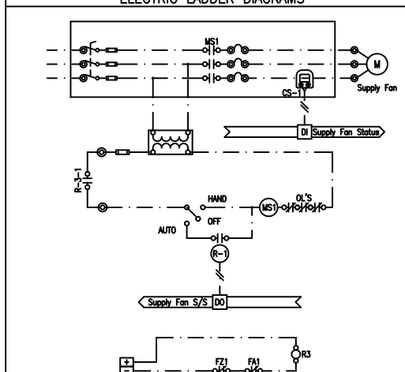

SUPPLY FAN STARTER (TYPICAL FOR RETURN FAN STARTER)

REVISIONS

NO.	DESCRIPTION	DATE

THE UNIVERSITY of NORTH CAROLINA at CHAPEL HILL

The University of North Carolina
Chapel Hill, North Carolina

Standard Control Drawings

Eng	RR
Drawn	BMV
Chkd	---
Appd	---
Issued	6/15/2021
Job No.	----
Scale	N/A
Proj Code	

REV. 2021

SINGLE DUCT CV AH WITH PREHEAT & CHW COIL, MIN OA DAMPER & RETURN FAN

00 OF 00
SHEET NUMBER

C-1.07

DWG NUMBER

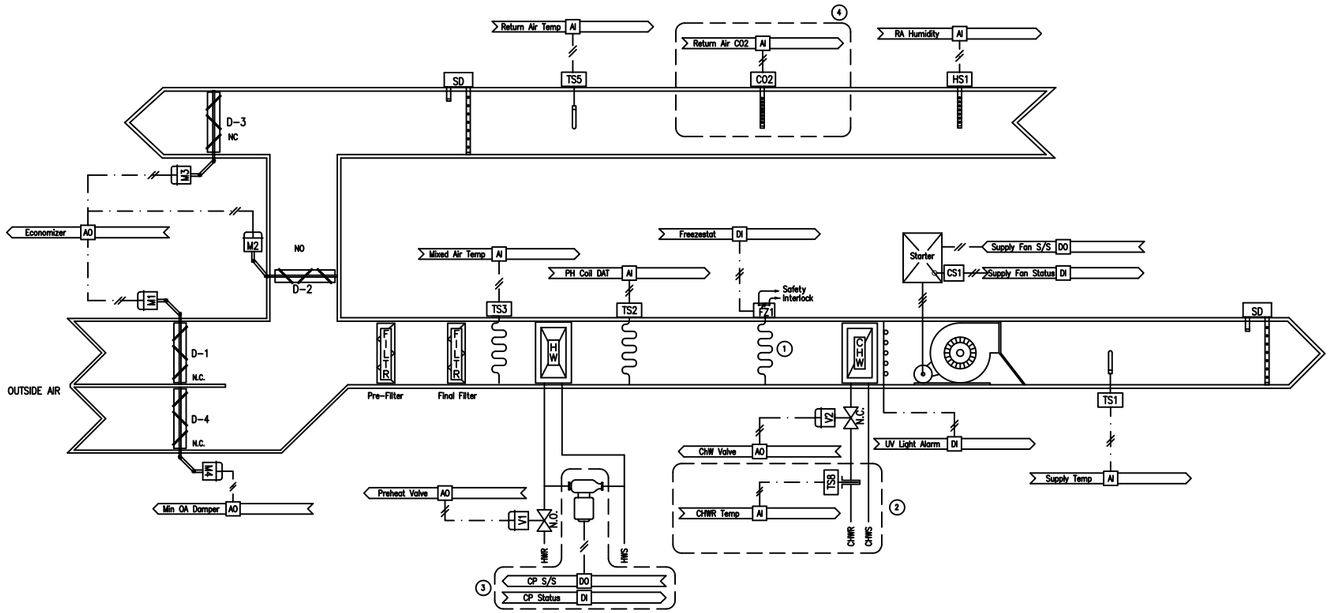

NOTES

1. Provide multiple Freezestats as required to achieve 3ft of element for each 3 sq.ft of coil face area.
2. Provide CHWR temperature well and sensor on all units with coil capacity greater than 10 tons.
3. Where applicable per mechanical design.
4. Provide Return Air or Space CO2 sensors as directed.
5. See sheet C-4.05 Miscellaneous Controls for additional equipment details.

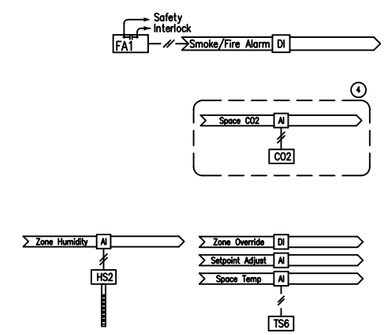

POINTS LIST

ADDRESS	POINT DESCRIPTOR	DI	AI	DO	AO	VP	REMARKS
	Supply Fan S/S			*			
	Supply Fan Status	*					
	Supply Temp		*				
	PH Coil DAT		*				
	Freezestat	*					
	Space Temp		*				
	Setpoint Adjust		*				
	Zone Override	*					
	Mixed Air Temp		*				
	Return Air Temp		*				
	Preheat Valve				*		
	Circ Pump S/S			*			See Note 3
	Circ Pump Status	*					See Note 3
	CHW Valve				*		
	Economizer				*		
	Min OA Damper				*		
	Return Air CO2		*				See Note 4
	Space CO2		*				See Note 4
	CHWR Temp		*				See Note 2
	Smoke/Fire Alarm	*					
	RA Humidity		*				
	Zone Humidity		*				
	UV Light Alarm	*					

LOGIC VARIABLES

BINARY	ANALOG	DESCRIPTION
Occ		ON WHEN OCCUPIED MODE ACTIVE
RUN		ON WHEN UNIT COMMANDED TO START
SBH		ON WHEN SETBACK HEATING MODE ACTIVE
SBC		ON WHEN SETBACK COOLING MODE ACTIVE
WUP		ON WHEN WARM-UP MODE ACTIVE
CDN		ON WHEN COOL-DOWN MODE ACTIVE
SGO		ON WHEN SUPPLY FAN ENERGIZED AND STATUS PROVEN
MAGO		ON WHEN OA CONDITIONS ALLOW ECONOMIZER CONTROL
FRZ		ON WHEN FREEZESTAT IS IN ALARM
Fire		ON WHEN FIRE ALARM IS ACTIVE
SFTY		ON WHEN "ANY UNIT SHUTDOWN ALARM IS ON
	SpTmp	VARIABLE VALUE OF SPACE TEMPERATURE
	OAT	VARIABLE VALUE OF OUTSIDE AIR TEMPERATURE
	SAT	VARIABLE VALUE OF SUPPLY AIR TEMPERATURE
	PHT	VARIABLE VALUE OF PREHEAT AIR TEMPERATURE
	MAT	VARIABLE VALUE OF MIXED AIR TEMPERATURE
	DASP	VARIABLE CALCULATED VALUE OF DISCHARGE TEMPERATURE SETPOINT
	CPCT	VARIABLE CALCULATED VALUE OF CHW VALVE POSITION
	HPCT	VARIABLE CALCULATED VALUE OF HW VALVE POSITION
	EPCT	VARIABLE CALCULATED VALUE OF ECONOMIZER PID OUTPUT
	MINOA	VARIABLE CALCULATED VALUE OF MIN OA DAMPER POSITION

REVISIONS

NO.	DESCRIPTION	DATE

THE UNIVERSITY of NORTH CAROLINA at CHAPEL HILL

SINGLE DUCT CV AH WITH PREHEAT & CHW COIL, MIN OA DAMPER, NO RETURN FAN

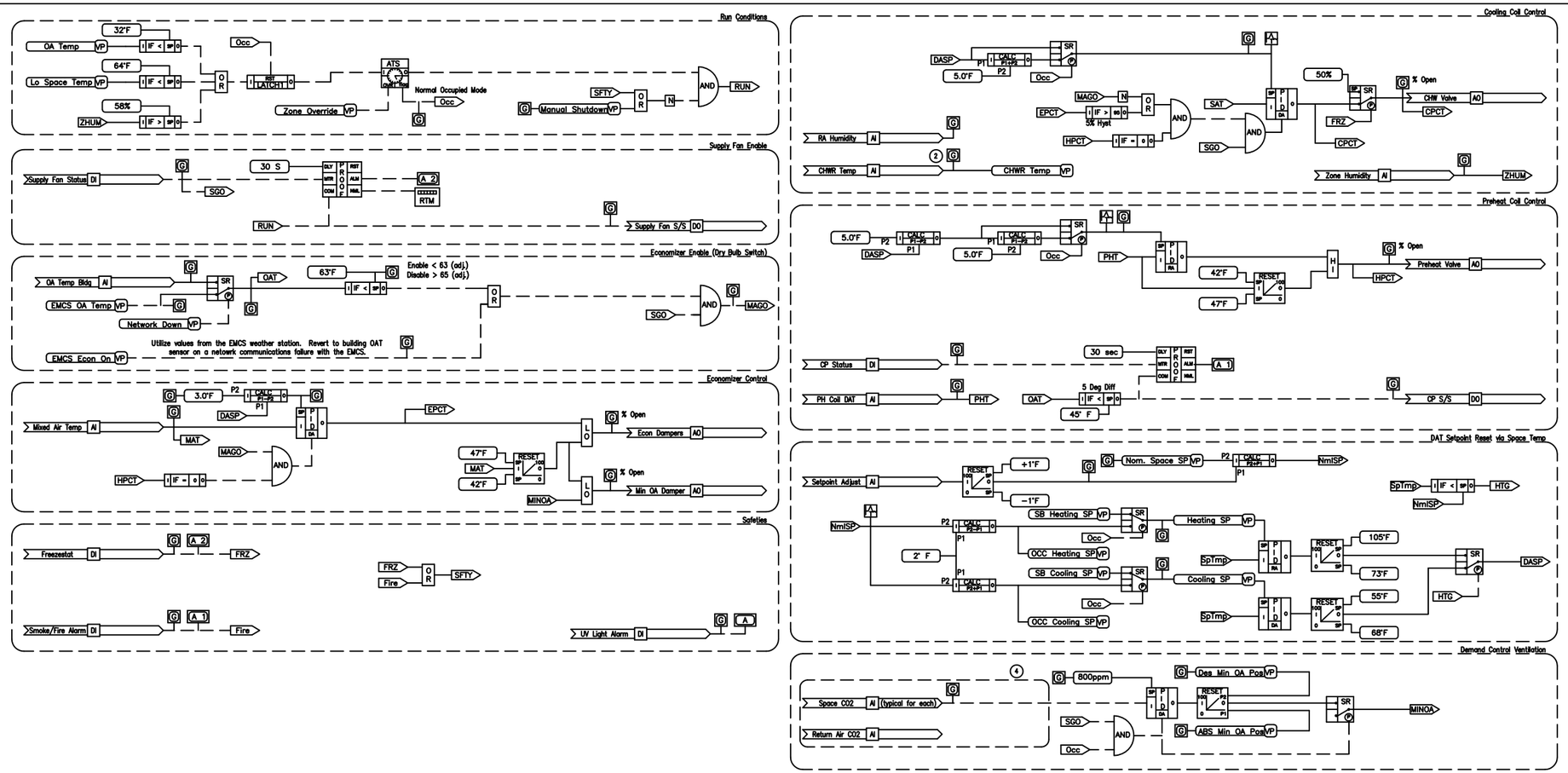

Software Logic Diagram

ELECTRIC LADDER DIAGRAMS

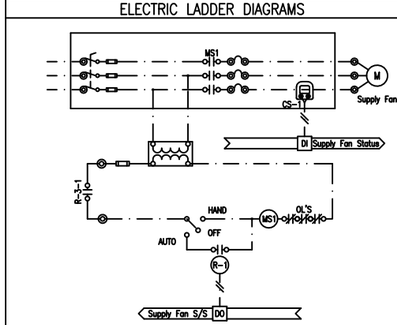

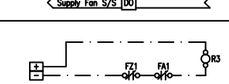

SAFETY INTERLOCK DETAIL

The University of North Carolina
Chapel Hill, North Carolina

Standard Control Drawings

Eng	RR
Drawn	BMV
Chkd	---
Appd	---
Issued	6/15/2021
Job No.	-----
Scale	N/A
Proj Code	

REV. 2021

SINGLE DUCT CV AH WITH PREHEAT & CHW COIL, MIN OA DAMPER, NO RETURN FAN

00 OF 00
SHEET NUMBER

C-1.08
DWG NUMBER

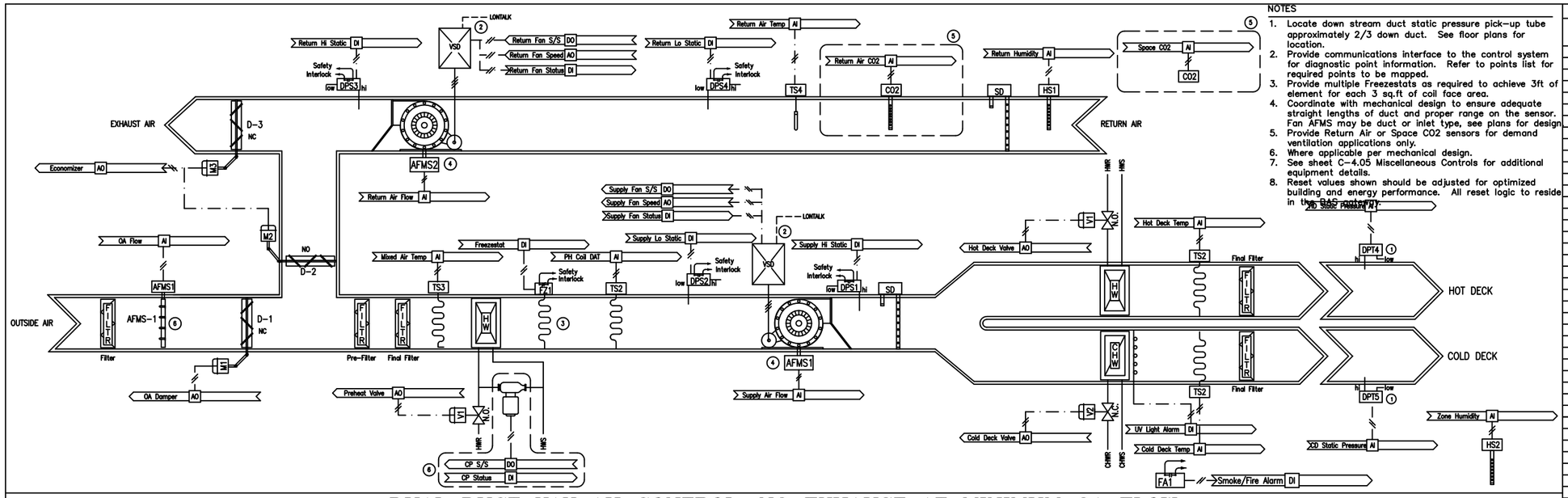

NOTES

1. Locate down stream duct static pressure pick-up tube approximately 2/3 down duct. See floor plans for location.
2. Provide communications interface to the control system for diagnostic point information. Refer to points list for required points to be mapped.
3. Provide multiple Freezestats as required to achieve 3ft of element for each 3 sq.ft of coil face area.
4. Coordinate with mechanical design to ensure adequate straight lengths of duct and proper range on the sensor. Fan AFMS may be duct or inlet type, see plans for design.
5. Provide Return Air or Space CO2 sensors for demand ventilation applications only.
6. Where applicable per mechanical design.
7. See sheet C-4.05 Miscellaneous Controls for additional equipment details.
8. Reset values shown should be adjusted for optimized building and energy performance. All reset logic to reside in the CAS network.

DUAL DUCT VAV AH CONTROL, NO EXHAUST AT MINIMUM OA FLOW

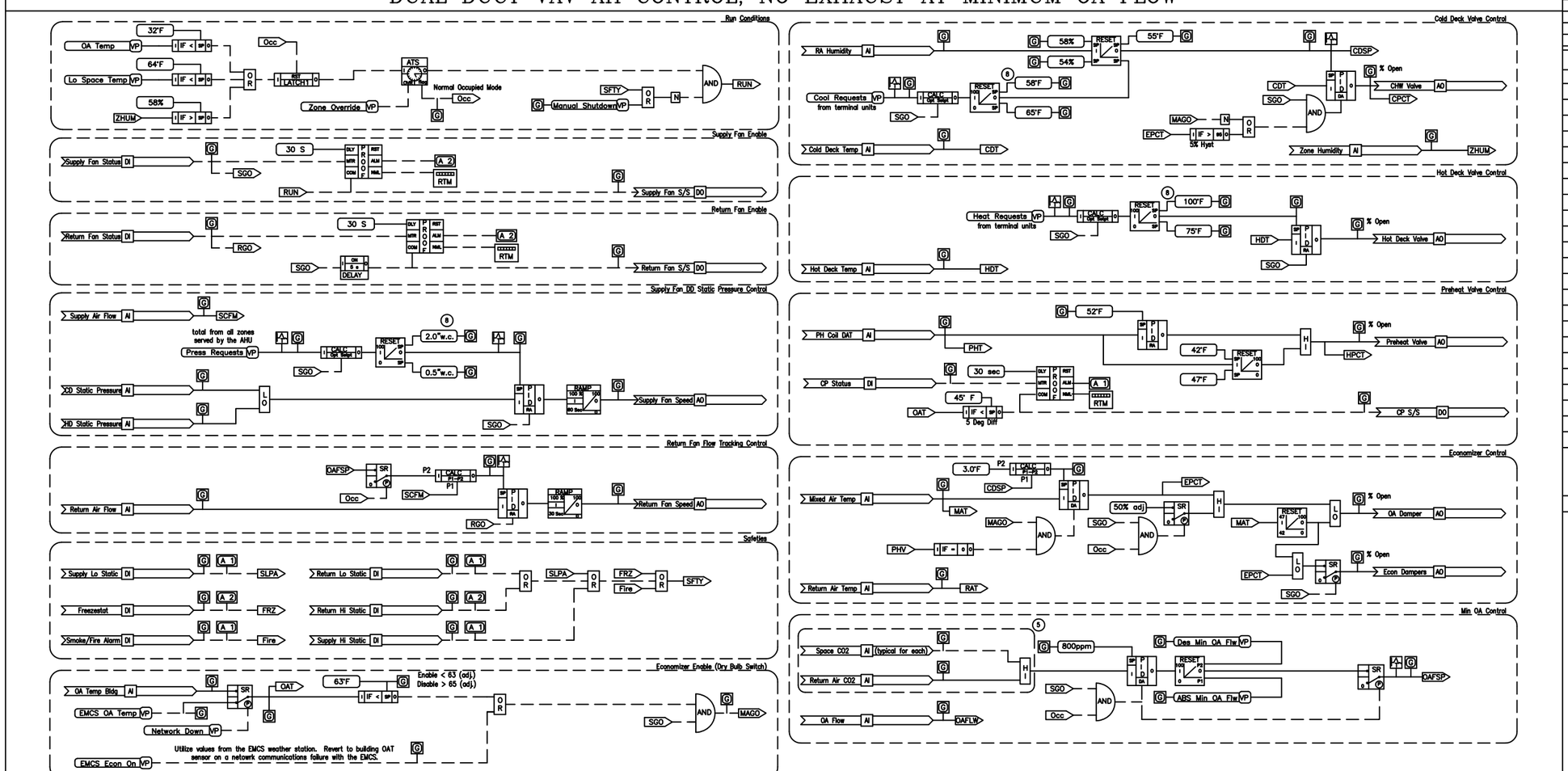

Software Logic Diagram

POINTS LIST

ADDRESS	POINT DESCRIPTOR	DI	AI	DO	AO	VP	REMARKS
	Supply Fan S/S			•			
	Supply Fan Status	•					
	Supply Fan Speed				•		
	Return Fan S/S			•			
	Return Fan Status	•					
	Return Fan Speed				•		
	HD Static Pressure		•				See Note 1
	CD Static Pressure		•				See Note 1
	Hot Deck Temp		•				
	Cold Deck Temp		•				
	PH Coil DAT		•				
	Freezestat	•					
	Mixed Air Temp		•				
	Return Air Temp		•				
	Return Air CO2		•				See Note 5
	Space CO2		•				See Note 5
	Hot Deck Valve				•		
	Cold Deck Valve				•		
	Preheat Valve				•		
	Circ Pump S/S			•			See Note 6
	Circ Pump Status	•					See Note 6
	Economizer				•		
	OA Damper				•		
	OA Flow		•				
	Supply Air Flow		•				
	Return Air Flow		•				
	Smoke/Fire Alarm	•					
	Supply Hi Static	•					
	Supply Lo Static	•					
	Return Hi Static	•					
	Return Lo Static	•					
	VFD Alarm/Fault					•	Interface Pt. (Typ. ea VFD)
	VFD Fault Code					•	Interface Pt. (Typ. ea VFD)
	VFD Spd Feedback					•	Interface Pt. (Typ. ea VFD)
	VFD KW					•	Interface Pt. (Typ. ea VFD)
	VFD In Bypass					•	Interface Pt. (Typ. ea VFD)

LOGIC VARIABLES

BINARY	ANALOG	DESCRIPTION
Occ		ON WHEN OCCUPIED MODE ACTIVE
RUN		ON WHEN UNIT COMMANDED TO START
SBH		ON WHEN SETBACK HEATING MODE ACTIVE
SBC		ON WHEN SETBACK COOLING MODE ACTIVE
WUP		ON WHEN WARM-UP MODE ACTIVE
CDN		ON WHEN COOL-DOWN MODE ACTIVE
SGO		ON WHEN SUPPLY FAN ENERGIZED AND STATUS PROVEN
RGO		ON WHEN RETURN FAN ENERGIZED AND STATUS PROVEN
MAGO		ON WHEN OA CONDITIONS ALLOW ECONOMIZER CONTROL
SLPA		ON WHEN SUPPLY LOW STATIC SAFETY SWITCH IS IN ALARM
FRZ		ON WHEN FREEZESTAT IS IN ALARM
Fire		ON WHEN FIRE ALARM IS ACTIVE
SFTY		ON WHEN ANY UNIT SHUTDOWN ALARM IS ON
	SCFM	VARIABLE VALUE OF SUPPLY AIR FLOW
	HST	VARIABLE CALCULATED VALUE OF HIGHEST SPACE TEMPERATURE
	CDT	VARIABLE VALUE OF COLD DECK SUPPLY AIR TEMPERATURE
	HDT	VARIABLE VALUE OF HOT DECK SUPPLY AIR TEMPERATURE
	OAT	VARIABLE VALUE OF OUTSIDE AIR TEMPERATURE
	MAT	VARIABLE VALUE OF MIXED AIR TEMPERATURE
	CDSP	VARIABLE CALCULATED VALUE OF COLD DECK TEMPERATURE SETPOINT
	MINOA	VARIABLE CALCULATED VALUE OF MINIMUM OA FLOW SETPOINT
	OAFLW	VARIABLE VALUE OF OA FLOW
	EPCT	VARIABLE CALCULATED VALUE OF ECONOMIZER PID OUTPUT

ELECTRIC LADDER DIAGRAMS

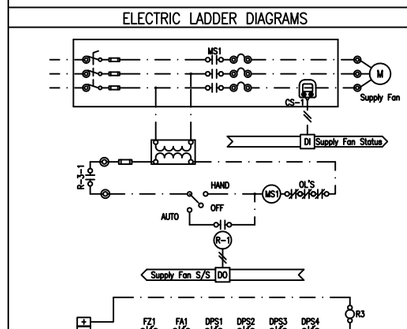

SUPPLY FAN VSD (TYPICAL FOR RETURN FAN VSD)

REVISIONS

NO.	DESCRIPTION	DATE

THE UNIVERSITY of NORTH CAROLINA at CHAPEL HILL

The University of North Carolina
Chapel Hill, North Carolina

Standard Control Drawings

Eng	RR
Drawn	BMV
Chkd	---
Appd	---
Issued	6/15/2021
Job No.	----
Scale	N/A
Proj Code	

REV. 2021

DUAL DUCT VAV AH CONTROL

00 OF 00
SHEET NUMBER

C-1.09
DWG NUMBER

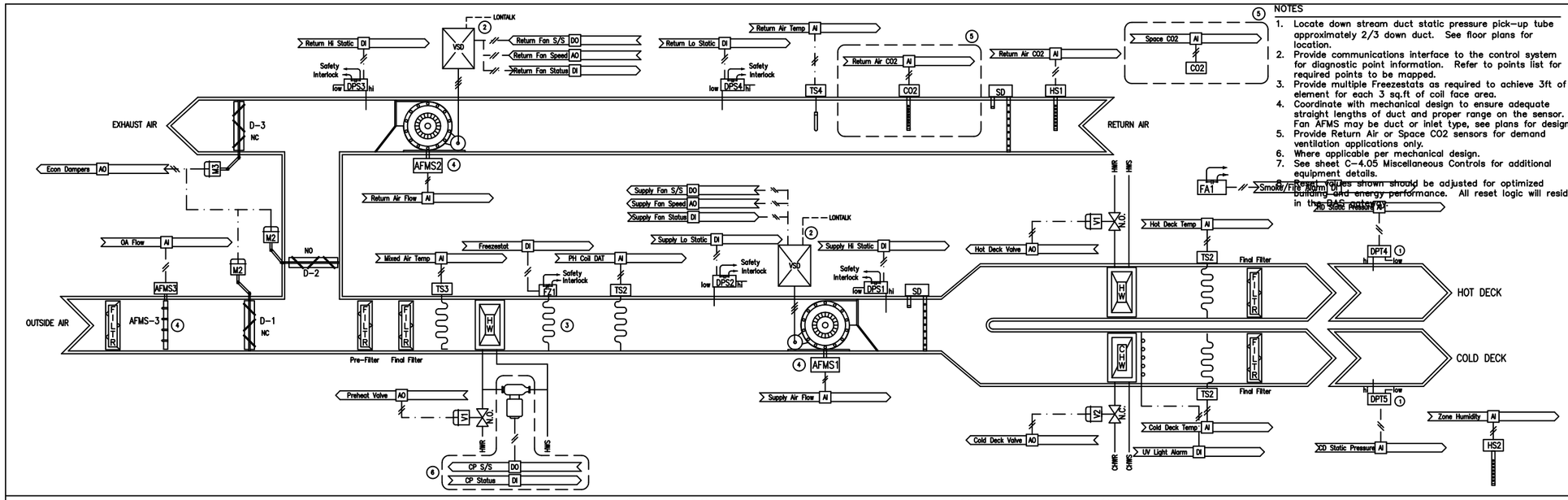

DUAL DUCT VAV AH CONTROL, WITH UNIT EXHAUST AT MIN OA FLOW

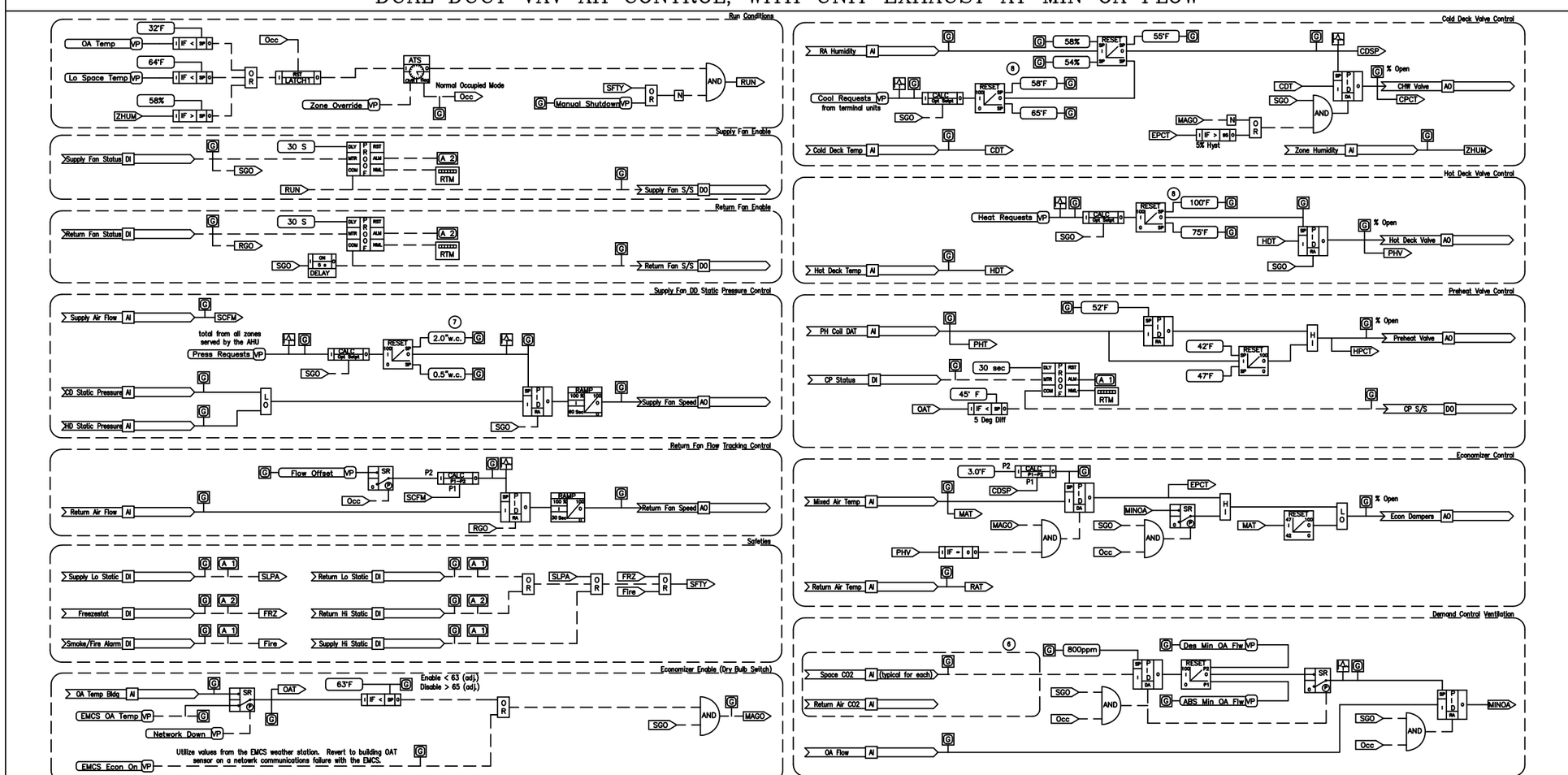

Software Logic Diagram

NOTES

1. Locate down stream duct static pressure pick-up tube approximately 2/3 down duct. See floor plans for location.
2. Provide communications interface to the control system for diagnostic point information. Refer to points list for required points to be mapped.
3. Provide multiple Freezestats as required to achieve 3ft of element for each 3 sq.ft of coil face area.
4. Coordinate with mechanical design to ensure adequate straight lengths of duct and proper range on the sensor. Fan AFMS may be duct or inlet type, see plans for design.
5. Provide Return Air or Space CO2 sensors for demand ventilation applications only.
6. Where applicable per mechanical design.
7. See sheet C-4.05 Miscellaneous Controls for additional equipment details.
8. Reset values shown should be adjusted for optimized building and energy performance. All reset logic will reside in the BAS outstation.

POINTS LIST

ADDRESS	POINT DESCRIPTOR	DI	AI	DO	AO	VP	REMARKS
	Supply Fan S/S			•			
	Supply Fan Status	•					
	SF VSD Alarm	•					
	Supply Fan Speed				•		
	Return Fan S/S			•			
	Return Fan Status	•					
	RF VSD Alarm	•					
	Return Fan Speed				•		
	HD Static Pressure		•				See Note 1
	CD Static Pressure		•				See Note 1
	Hot Deck Temp		•				
	Cold Deck Temp		•				
	PH Coil DAT		•				
	Freezestat	•					
	Mixed Air Temp		•				
	Return Air Temp		•				
	Return Air CO2		•				See Note 5
	Space CO2		•				See Note 5
	Hot Deck Valve				•		
	Cold Deck Valve				•		
	Preheat Valve				•		
	Circ Pump S/S			•			See Note 6
	Circ Pump Status	•					See Note 6
	Economizer				•		
	OA Flow		•				
	Supply Air Flow		•				
	Return Air Flow		•				
	Fire Alarm	•					
	Supply Hi Static	•					
	Supply Lo Static	•					
	Return Hi Static	•					
	Return Lo Static	•					
	VFD Alarm/Fault					•	Interface Pt. (Typ. ea VFD)
	VFD Fault Code					•	Interface Pt. (Typ. ea VFD)
	VFD Spd Feedback					•	Interface Pt. (Typ. ea VFD)
	VFD KW					•	Interface Pt. (Typ. ea VFD)
	VFD In Bypass					•	Interface Pt. (Typ. ea VFD)

LOGIC VARIABLES

BINARY	ANALOG	DESCRIPTION
Occ		ON WHEN OCCUPIED MODE ACTIVE
RUN		ON WHEN UNIT COMMANDED TO START
SBH		ON WHEN SETBACK HEATING MODE ACTIVE
SBC		ON WHEN SETBACK COOLING MODE ACTIVE
WUP		ON WHEN WARM-UP MODE ACTIVE
CDN		ON WHEN COOL-DOWN MODE ACTIVE
SGO		ON WHEN SUPPLY FAN ENERGIZED AND STATUS PROVEN
RGO		ON WHEN RETURN FAN ENERGIZED AND STATUS PROVEN
MAGO		ON WHEN OA CONDITIONS ALLOW ECONOMIZER CONTROL
SLPA		ON WHEN SUPPLY LOW PRESSURE SWITCH IS IN ALARM
FRZ		ON WHEN FREEZESTAT IS IN ALARM
Fire		ON WHEN FIRE ALARM IS ACTIVE
SFTY		ON WHEN ANY UNIT SHUTDOWN SAFETY IS ON
	SCFM	VARIABLE VALUE OF SUPPLY AIR FLOW
	HST	VARIABLE CALCULATED VALUE OF HIGHEST SPACE TEMPERATURE
	CDT	VARIABLE VALUE OF COLD DECK SUPPLY AIR TEMPERATURE
	HDT	VARIABLE VALUE OF HOT DECK SUPPLY AIR TEMPERATURE
	OAT	VARIABLE VALUE OF OUTSIDE AIR TEMPERATURE
	MAT	VARIABLE VALUE OF MIXED AIR TEMPERATURE
	CDSP	VARIABLE CALCULATED VALUE OF COLD DECK TEMPERATURE SETPOINT
	MINOA	VARIABLE CALCULATED VALUE OF MINIMUM OA FLOW SETPOINT
	OAFLW	VARIABLE VALUE OF OA FLOW
	EPCT	VARIABLE CALCULATED VALUE OF ECONOMIZER PID OUTPUT

ELECTRIC LADDER DIAGRAMS

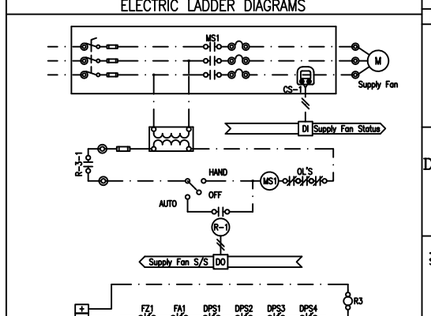

SUPPLY FAN VSD (TYPICAL FOR RETURN FAN VSD)

REVISIONS

NO.	DESCRIPTION	DATE

THE UNIVERSITY of NORTH CAROLINA at CHAPEL HILL

The University of North Carolina
Chapel Hill, North Carolina

Standard Control Drawings

Eng	RR
Drawn	BMV
Chkd	---
Appd	---
Issued	6/15/2021
Job No.	----
Scale	N/A
Proj Code	

REV. 2021

DUAL DUCT VAV AH CONTROL

00 OF 00
SHEET NUMBER

C109a
DWG NUMBER

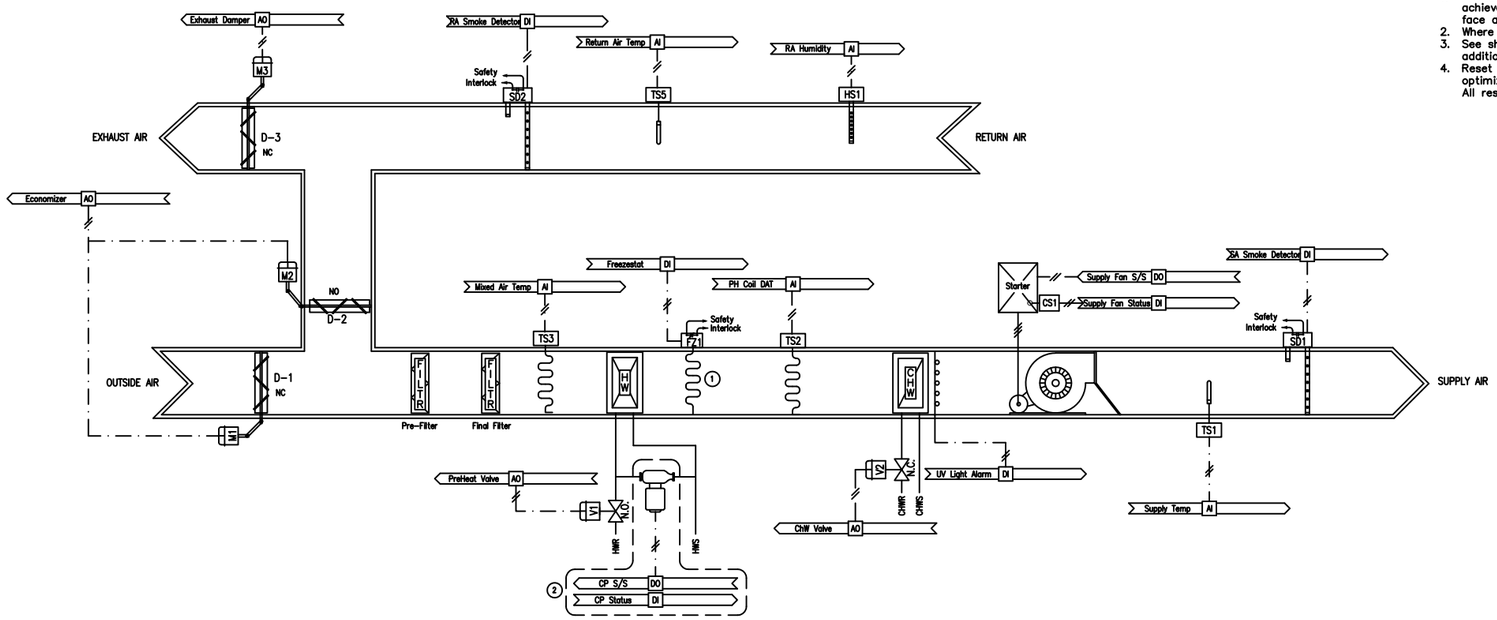

NOTES

1. Provide multiple Freezestats as required to achieve 3ft of element for each 3 sq.ft of coil face area.
2. Where applicable per mechanical design.
3. See sheet C-4.05 Miscellaneous Controls for additional equipment details.
4. Reset values shown should be adjusted for optimized building and energy performance. All reset logic will reside in the BAS gateway.

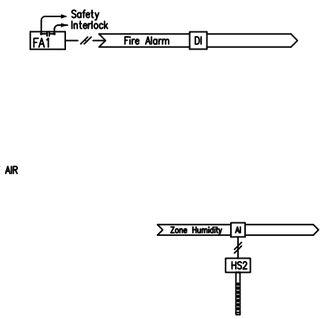

POINTS LIST

ADDRESS	POINT DESCRIPTOR	POINT TYPE DI	AI	DO	AO	VP	REMARKS
	Supply Fan S/S			*			
	Supply Fan Status	*					
	Supply Temp		*				
	SA Smoke Detector	*					
	RA Smoke Detector	*					
	PH Coil DAT		*				
	Freezestat	*					
	Mixed Air Temp		*				
	Return Air Temp		*				
	Circ Pump S/S			*			
	Circ Pump Status	*					
	PreHeat Valve				*		
	CHW Valve				*		
	Economizer				*		
	Exhaust Damper				*		
	Fire Alarm	*					
	Return Air Humidity		*				
	Zone Humidity		*				
	UV Light Alarm	*					

LOGIC VARIABLES

BINARY	ANALOG	DESCRIPTION
Occ		ON WHEN OCCUPIED MODE ACTIVE
RUN		ON WHEN UNIT COMMANDED TO START
SBH		ON WHEN SETBACK HEATING MODE ACTIVE
SBC		ON WHEN SETBACK COOLING MODE ACTIVE
WUP		ON WHEN WARM-UP MODE ACTIVE
CDN		ON WHEN COOL-DOWN MODE ACTIVE
SGO		ON WHEN SUPPLY FAN ENERGIZED AND STATUS PROVEN
MAGO		ON WHEN OA CONDITIONS ALLOW ECONOMIZER CONTROL
SMK		ON WHEN EITHER SMOKE DETECTOR IS IN ALARM
FRZ		ON WHEN FREEZESTAT IS IN ALARM
Fire		ON WHEN FIRE ALARM IS ACTIVE
SFTY		ON WHEN "FRZ", "Fire" OR "SMK" ARE ON
	HST	VARIABLE CALCULATED VALUE OF HIGHEST SPACE TEMPERATURE
	SAT	VARIABLE VALUE OF SUPPLY AIR TEMPERATURE
	OAT	VARIABLE VALUE OF OUTSIDE AIR TEMPERATURE
	PHT	VARIABLE VALUE OF PREHEAT AIR TEMPERATURE
	MAT	VARIABLE VALUE OF MIXED AIR TEMPERATURE
	DASP	VARIABLE CALCULATED VALUE OF DISCHARGE TEMPERATURE SETPOINT
	CPCT	VARIABLE CALCULATED VALUE OF CHW VALVE POSITION
	HPCT	VARIABLE CALCULATED VALUE OF HW VALVE POSITION
	EPCT	VARIABLE CALCULATED VALUE OF ECONOMIZER PID OUTPUT

SINGLE DUCT CV AH WITH PREHEAT & CHW COIL

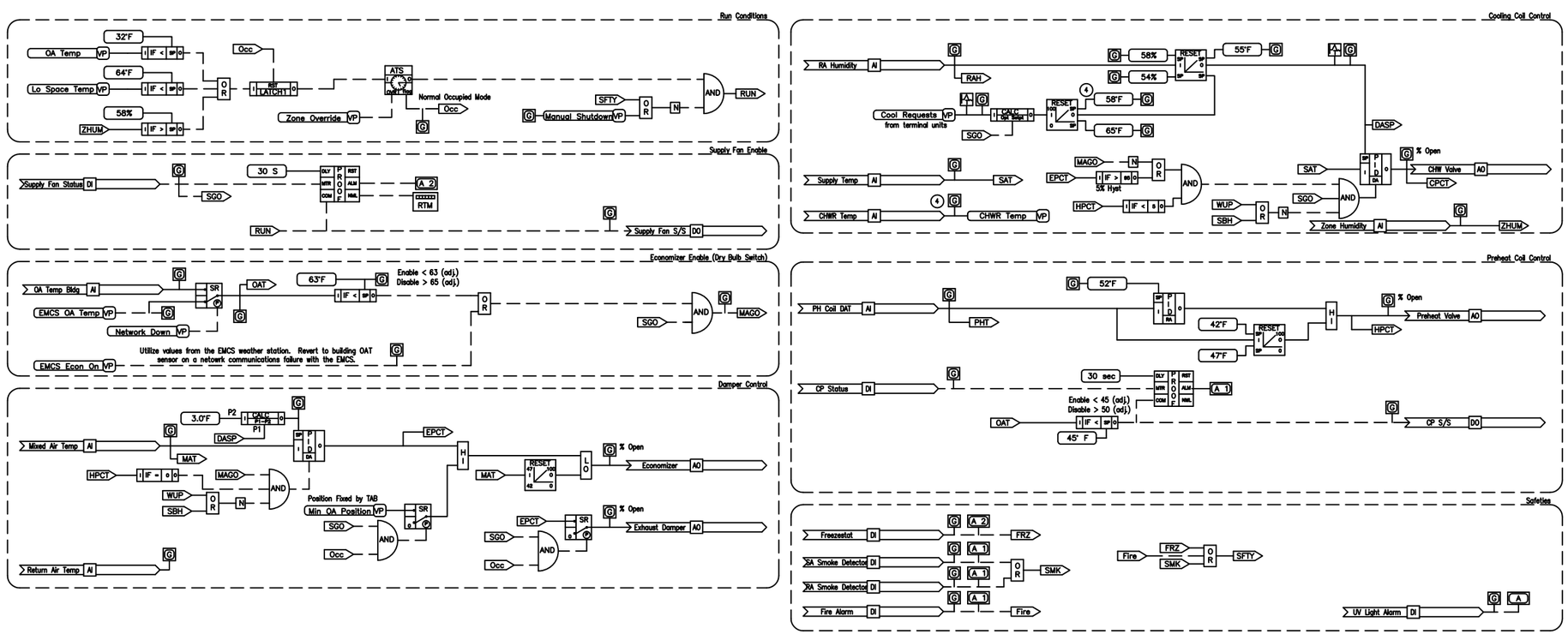

Software Logic Diagram

REVISIONS

NO.	DESCRIPTION	DATE

THE UNIVERSITY of NORTH CAROLINA at CHAPEL HILL

The University of North Carolina
Chapel Hill, North Carolina

Standard Control Drawings

ELECTRIC LADDER DIAGRAMS

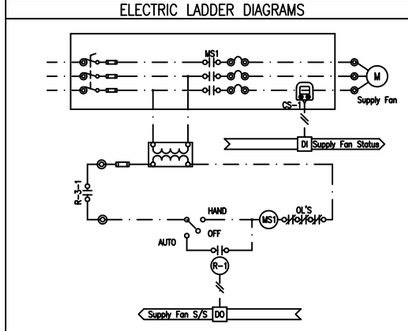

SAFETY INTERLOCK DETAIL

Eng	RR
Drawn	RR
Chkd	---
Appd	---
Issued	6/16/2020
Job No.	----
Scale	N/A
Proj Code	

REV. 2020

SINGLE DUCT CV AH WITH PREHEAT & CHW COIL

00 OF 00
SHEET NUMBER

C-1.10

DWG NUMBER

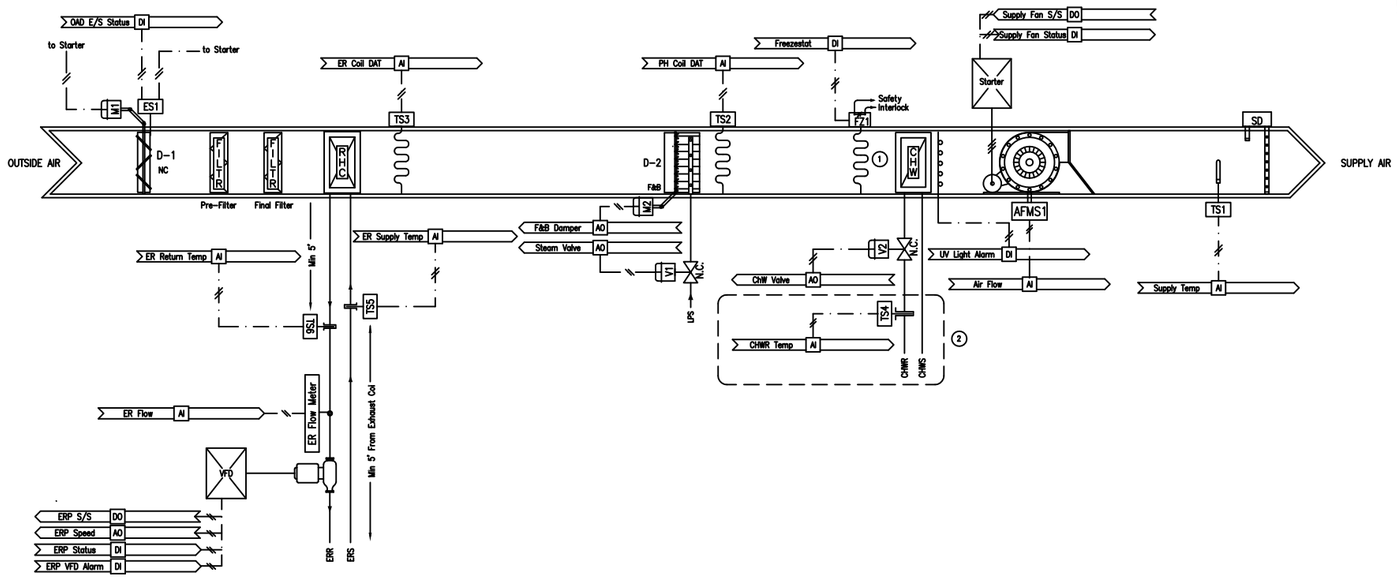

NOTES

1. Provide multiple Freezestats as required to achieve 3ft of element for each 3 sq.ft of coil face area.
2. Provide CHWR temperature well and sensor on all units with coil capacity greater than 10 tons.
3. Where applicable per mechanical design.
4. See sheet C-4.05 Miscellaneous Controls for additional equipment details.
5. Reset values shown should be adjusted for optimized building and energy performance. All reset logic to reside in the BAS gateway.

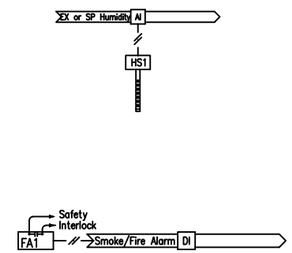

100% OA CV AH WITH HEAT RECOVERY, FACE & BYPASS STEAM, CHW COIL

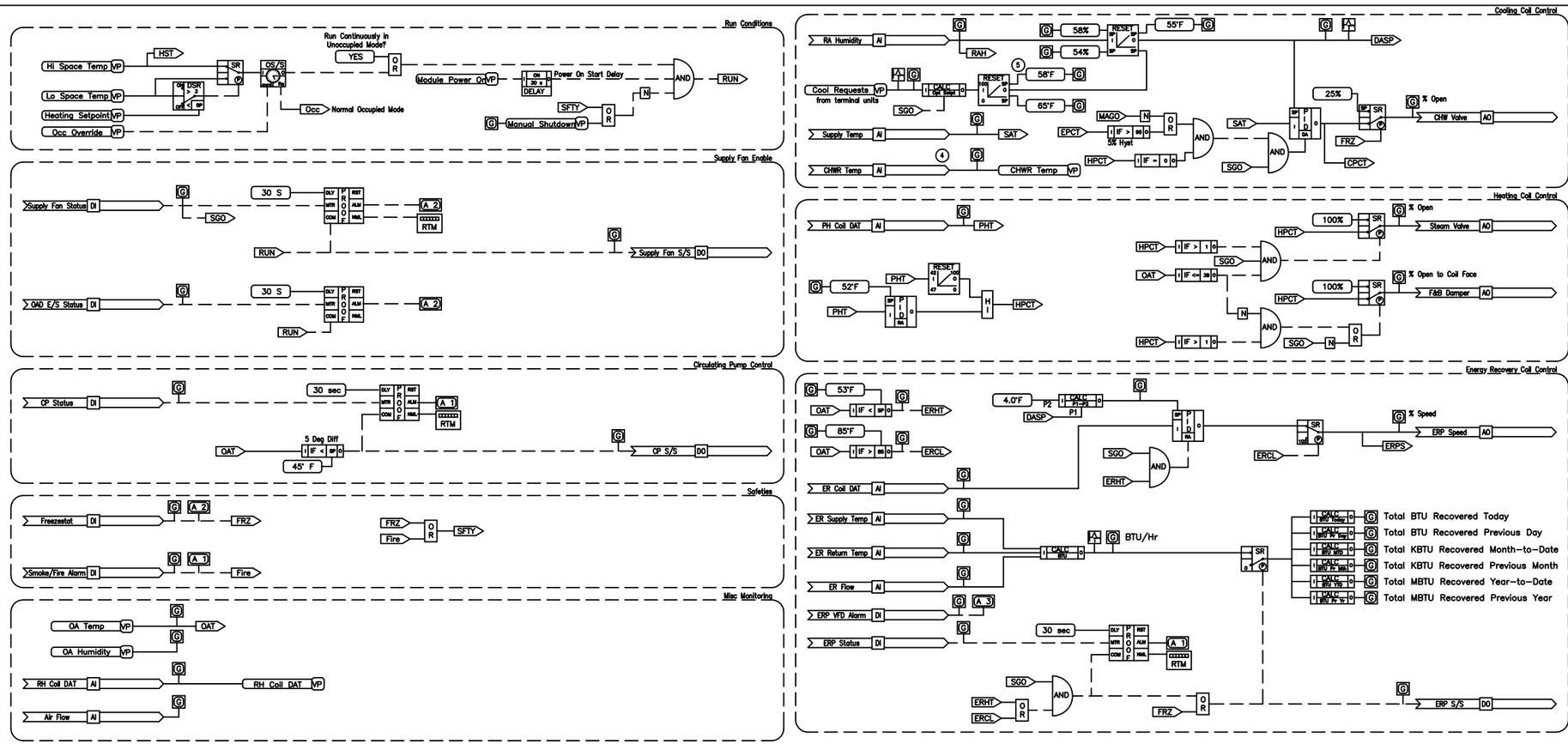

Software Logic Diagram

POINTS LIST

ADDRESS	POINT DESCRIPTOR	POINT TYPE DI	AI	DO	AO	VP	REMARKS
	Supply Fan S/S			•			
	Supply Fan Status	•					
	Air Flow		•				
	Supply Temp		•				
	PH Coil DAT		•				
	Freezestat	•					
	OAD E/S Status	•					
	ER Coil DAT		•				
	CHWR Temp		•				See Note 2
	CHW Valve				•		
	Steam Valve				•		
	F&B Damper				•		
	Smoke/Fire Alarm	•					
	ER Pump S/S			•			
	ER Pump Status	•					
	ERP VFD Alarm	•					
	ERP Speed				•		
	ER Supply Temp		•				
	ER Return Temp		•				
	ER Flow		•				
	EX or SP Humidity		•				

LOGIC VARIABLES

BINARY	ANALOG	DESCRIPTION
Occ		ON WHEN OCCUPIED MODE ACTIVE
RUN		ON WHEN UNIT COMMANDED TO START
SGO		ON WHEN SUPPLY FAN ENERGIZED AND STATUS PROVEN
SMK		ON WHEN SMOKE DETECTOR IS IN ALARM
FRZ		ON WHEN FREEZESTAT IS IN ALARM
Fire		ON WHEN FIRE ALARM IS ACTIVE
SFTY		ON WHEN "FRZ", "Fire" OR "SMK" ARE ON
	HST	VARIABLE CALCULATED VALUE OF HIGHEST SPACE TEMPERATURE
	OAT	VARIABLE VALUE OF OUTSIDE AIR TEMPERATURE
	SAT	VARIABLE VALUE OF SUPPLY AIR TEMPERATURE
	PHT	VARIABLE VALUE OF PREHEAT AIR TEMPERATURE
	CPCT	VARIABLE CALCULATED VALUE OF CHW VALVE POSITION
	HPCT	VARIABLE CALCULATED VALUE OF HW VALVE POSITION
	ERPS	VARIABLE CALCULATED VALUE OF ENERGY RECOVERY PUMP SPEED
ERHT		ON WHEN ENERGY RECOVERY SYSTEM ENABLED IN HEATING MODE
ERCL		ON WHEN ENERGY RECOVERY SYSTEM ENABLED IN COOLING MODE

ELECTRIC LADDER DIAGRAMS

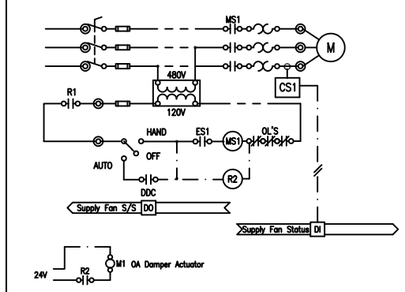

SUPPLY FAN STARTER

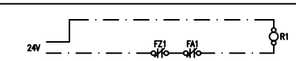

SAFETY INTERLOCK DETAIL

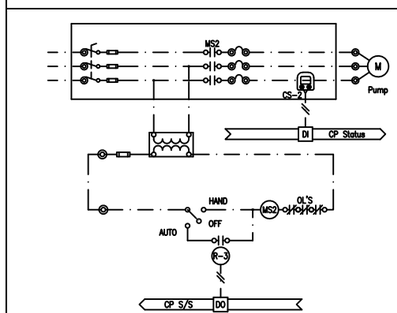

CIRCULATING PUMP STARTER

REVISIONS

NO.	DESCRIPTION	DATE

THE UNIVERSITY of NORTH CAROLINA at CHAPEL HILL

The University of North Carolina
Chapel Hill, North Carolina

Standard Control Drawings

Eng	RR
Drawn	BMV
Chkd	---
Appd	---
Issued	6/16/2012
Job No.	----
Scale	N/A
Proj Code	

REV. 2016

100% OA CV AH WITH HEAT RECOVERY, FACE & BYPASS STEAM, CHW COIL

00 OF 00
SHEET NUMBER

C-1.11
DWG NUMBER

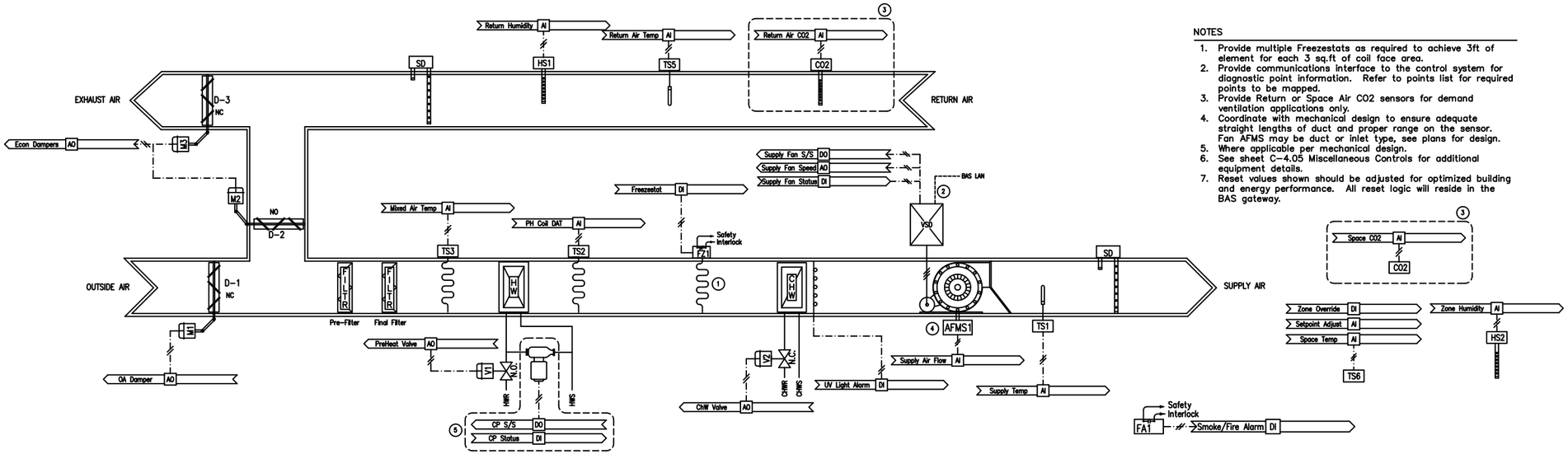

NOTES

1. Provide multiple Freezestats as required to achieve 3ft of element for each 3 sq.ft of coil face area.
2. Provide communications interface to the control system for diagnostic point information. Refer to points list for required points to be mapped.
3. Provide Return or Space Air CO2 sensors for demand ventilation applications only.
4. Coordinate with mechanical design to ensure adequate straight lengths of duct and proper range on the sensor. Fan AFMS may be duct or inlet type, see plans for design.
5. Where applicable per mechanical design.
6. See sheet C-4.05 Miscellaneous Controls for additional equipment details.
7. Reset values shown should be adjusted for optimized building and energy performance. All reset logic will reside in the BAS gateway.

SINGLE DUCT CV-VSD AH WITH PREHEAT & CHW

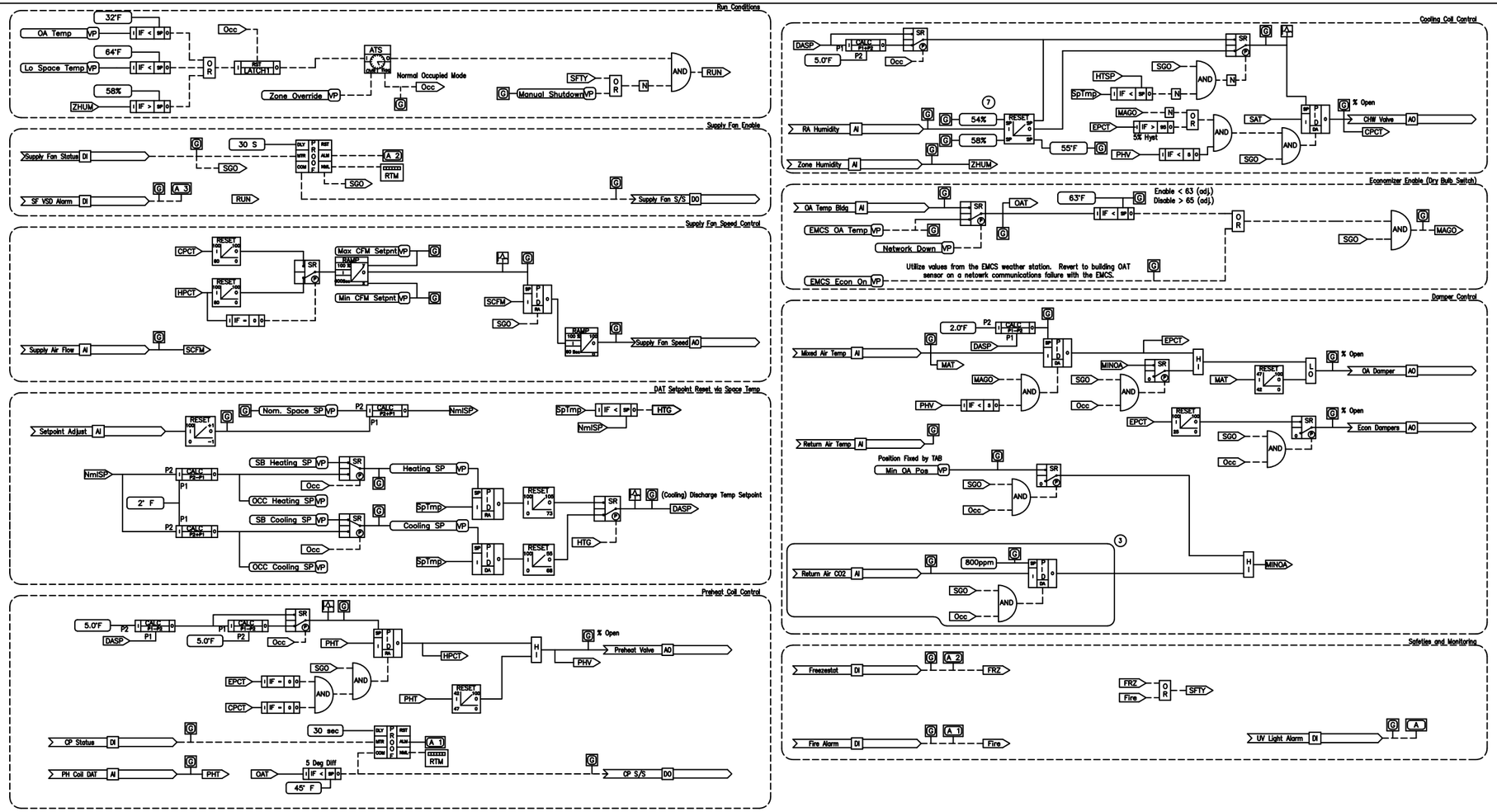

Software Logic Diagram

POINTS LIST

ADDRESS	POINT DESCRIPTOR	DI	AI	DO	AO	VP	REMARKS
	Supply Fan S/S			•			
	Supply Fan Status	•					
	Supply Fan Speed				•		
	Supply Air Flow		•				
	Supply Temp		•				
	PH Coil DAT		•				
	Freezestat	•					
	Mixed Air Temp		•				
	Space Temp		•				
	Setpoint Adjust		•				
	Zone Override	•					
	Return Air Temp		•				
	Return Air Humidity		•				
	Return Air CO2		•				See Note 3
	Space CO2		•				See Note 3
	PreHeat Valve				•		
	CHW Valve				•		
	Econ Dampers				•		
	OA Damper				•		
	Fire Alarm	•					
	Circ Pump S/S			•			See Note 5
	Circ Pump Status	•					See Note 5
	VFD Alarm/Fault					•	Interface Point
	VFD Fault Code					•	Interface Point
	VFD Spd Feedback					•	Interface Point
	VFD KW					•	Interface Point
	VFD In Bypass					•	Interface Point
	Zone Humidity		•				
	UV Light Alarm	•					

LOGIC VARIABLES

BINARY	ANALOG	DESCRIPTION
Occ		ON WHEN OCCUPIED MODE ACTIVE
RUN		ON WHEN UNIT COMMANDED TO START
SBH		ON WHEN SETBACK HEATING MODE ACTIVE
SBC		ON WHEN SETBACK COOLING MODE ACTIVE
WUP		ON WHEN WARM-UP MODE ACTIVE
CDN		ON WHEN COOL-DOWN MODE ACTIVE
SGO		ON WHEN SUPPLY FAN ENERGIZED AND STATUS PROVEN
MAGO		ON WHEN OA CONDITIONS ALLOW ECONOMIZER CONTROL
HTG		ON WHEN SPACE TEMPERATURE LOWER THAN NORMAL SPACE SETPOINT
FRZ		ON WHEN FREEZESTAT IS IN ALARM
Fire		ON WHEN FIRE ALARM IS ACTIVE
SFTY		ON WHEN UNIT SHUTDOWN SAFETY IS ON
	PHV	VARIABLE CALCULATED VALUE OF PREHEAT VALVE POSITON
	SpTmp	VARIABLE VALUE OF SPACE TEMPERATURE
	NmlSP	VARIABLE CALCULATED VALUE OF NORMAL SPACE TEMPERATURE SETPOINT
	SCFM	VARIABLE VALUE OF SUPPLY AIR FLOW (CFM)
	OAT	VARIABLE VALUE OF OUTSIDE AIR TEMPERATURE
	SAT	VARIABLE VALUE OF SUPPLY AIR TEMPERATURE
	PHT	VARIABLE VALUE OF PREHEAT AIR TEMPERATURE
	MAT	VARIABLE VALUE OF MIXED AIR TEMPERATURE
	MINOA	VARIABLE VALUE OF MIN OA DAMPER POSITION
	DASP	VARIABLE CALCULATED VALUE OF DISCHARGE TEMPERATURE SETPOINT
	CPCT	VARIABLE CALCULATED VALUE OF CHW VALVE POSITION
	HPCT	VARIABLE CALCULATED VALUE OF HEATING OUTPUT
	EPCT	VARIABLE CALCULATED VALUE OF ECONOMIZER PID OUTPUT
	RHP	VARIABLE CALCULATED VALUE OF CHW VALVE POSITION FOR DEHUMIDIFICATION

ELECTRIC LADDER DIAGRAMS

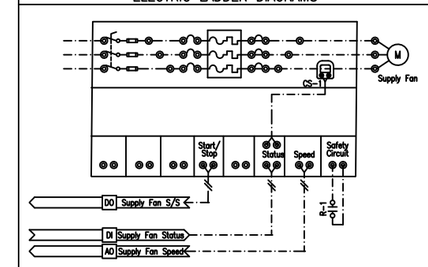

SUPPLY FAN VSD

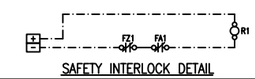

SAFETY INTERLOCK DETAIL

REVISIONS

NO.	DESCRIPTION	DATE

THE UNIVERSITY of NORTH CAROLINA at CHAPEL HILL

The University of North Carolina
Chapel Hill, North Carolina

Standard Control Drawings

Eng	RR
Drawn	RR
Chkd	---
Appd	---
Issued	9/15/2021
Job No.	----
Scale	N/A
Proj Code	

REV. 2021

SINGLE DUCT CV-VSD AH WITH PREHEAT & CHW

00 OF 00
SHEET NUMBER

C-1.12

DWG NUMBER

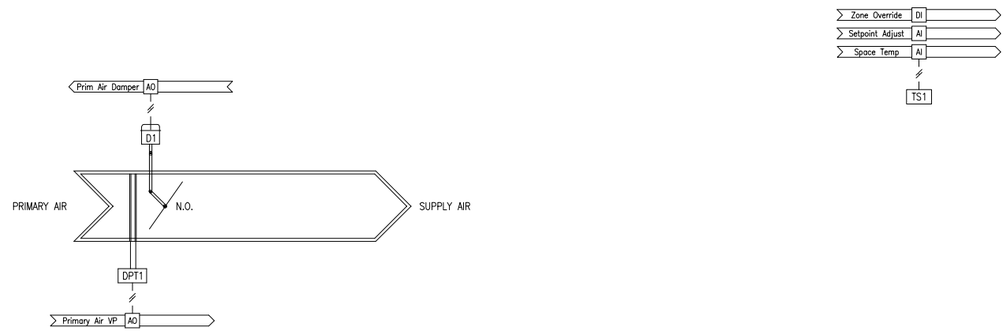

Single Duct VAV Box (Cooling Only)

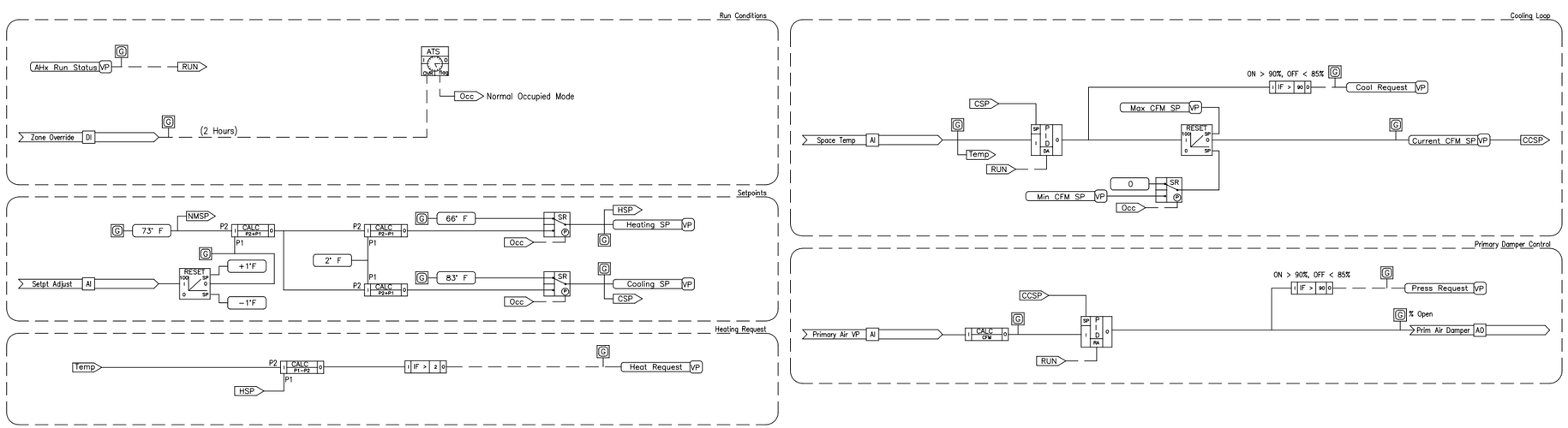

Software Logic Diagram

POINTS LIST

ADDRESS	POINT DESCRIPTOR	POINT TYPE DI	AI	DO	AO	VP	REMARKS
	Space Temp		•				
	Prim Air Damper				•		
	Primary Air VP		•				
	Setpoint Adjust		•				
	Zone Override	•					

LOGIC VARIABLES

BINARY	ANALOG	DESCRIPTION
Occ		ON WHEN OCCUPIED MODE ACTIVE
RUN		ON WHEN UNIT COMMANDED TO START
SBH		ON WHEN SETBACK HEATING MODE ACTIVE
SBC		ON WHEN SETBACK COOLING MODE ACTIVE
WUP		ON WHEN WARM-UP MODE ACTIVE
CDN		ON WHEN COOL-DOWN MODE ACTIVE
	Temp	VARIABLE VALUE OF SPACE TEMPERATURE
	HSP	VARIABLE CALCULATED VALUE OF ACTIVE HEATING SETPOINT
	CSP	VARIABLE CALCULATED VALUE OF ACTIVE COOLING SETPOINT
	CCSP	VARIABLE CALCULATED VALUE OF CURRENT CFM SETPOINT

REVISIONS

NO.	DESCRIPTION	DATE

THE UNIVERSITY of NORTH CAROLINA at CHAPEL HILL

The University of North Carolina
Chapel Hill, North Carolina

Standard Control Drawings

Eng	KDS
Drawn	KDS
Chkd	---
Appd	---
Issued	6/15/2012
Job No.	----
Scale	N/A
Proj Code	

Rev 2016

Single Duct VAV Box (Cooling Only)

00 OF 00
SHEET NUMBER

C-2.00
DWG NUMBER

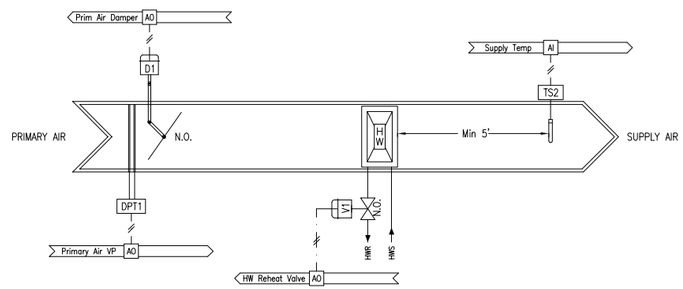

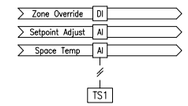

Single Duct VAV Box (with HW Reheat Control)

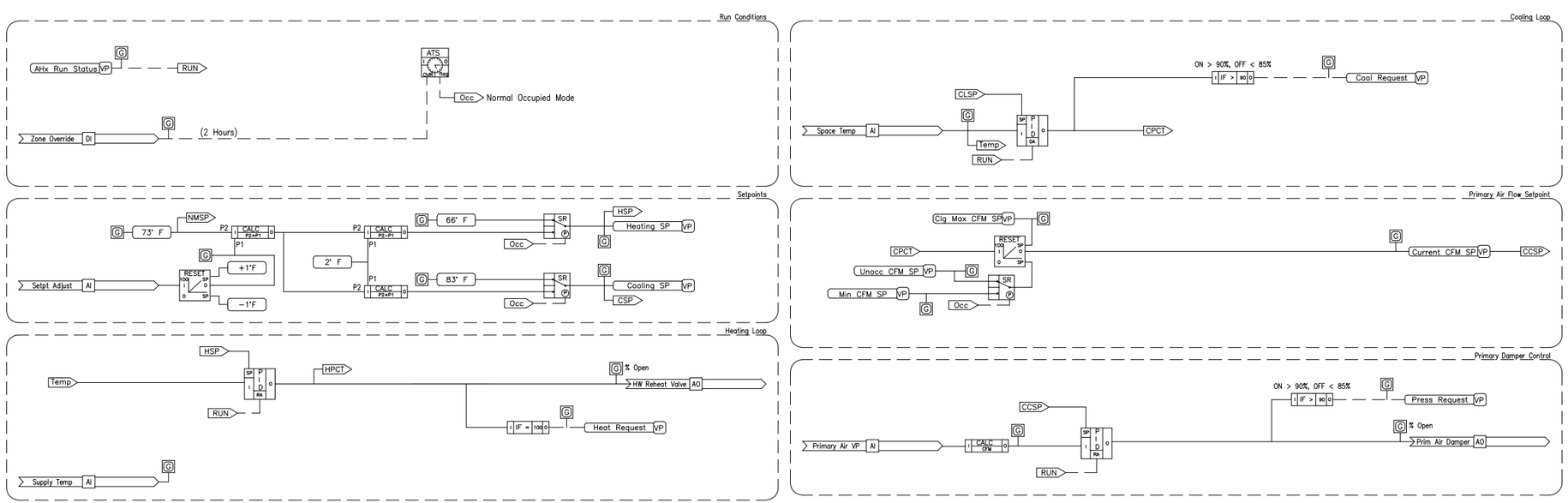

Software Logic Diagram

POINTS LIST

ADDRESS	POINT DESCRIPTOR	POINT TYPE DI	AI	DO	AO	VP	REMARKS
	Space Temp		•				
	Prim Air Damper				•		
	Primary Air VP		•				
	Supply Air Temp		•				
	HW Reheat Valve				•		
	Setpoint Adjust		•				
	Zone Override		•				

LOGIC VARIABLES

BINARY	ANALOG	DESCRIPTION
Occ		ON WHEN OCCUPIED MODE ACTIVE
RUN		ON WHEN UNIT COMMANDED TO START
SBH		ON WHEN SETBACK HEATING MODE ACTIVE
SBC		ON WHEN SETBACK COOLING MODE ACTIVE
WUP		ON WHEN WARM-UP MODE ACTIVE
CDN		ON WHEN COOL-DOWN MODE ACTIVE
	Temp	VARIABLE VALUE OF SPACE TEMPERATURE
	HSP	VARIABLE CALCULATED VALUE OF ACTIVE HEATING SETPOINT
	CSP	VARIABLE CALCULATED VALUE OF ACTIVE COOLING SETPOINT
	CCSP	VARIABLE CALCULATED VALUE OF CURRENT CFM SETPOINT
	CPCT	VARIABLE CALCULATED VALUE OF THE COOLING LOOP OUTPUT (COOLING %)
	HPCT	VARIABLE CALCULATED VALUE OF THE HEATING LOOP OUTPUT (HEATING %)
	NMSP	VARIABLE VALUE OF THE NOMINAL SPACE TEMPERATURE SETPOINT

REVISIONS

NO.	DESCRIPTION	DATE

THE UNIVERSITY of NORTH CAROLINA at CHAPEL HILL

The University of North Carolina
Chapel Hill, North Carolina

Standard Control Drawings

Eng	KDS
Drawn	KDS
Chkd	---
Appd	---
Issued	5/22/2012
Job No.	----
Scale	N/A
Proj Code	

Revision 2016

Single Duct VAV Box (with HW Reheat Control)

00 OF 00
SHEET NUMBER

C-2.01
DWG NUMBER

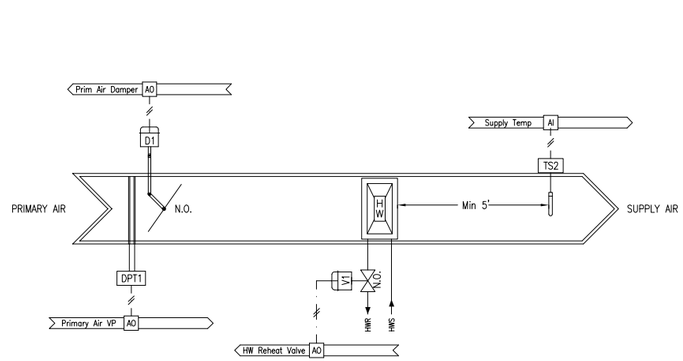

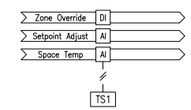

Single Duct VAV Box (with HW Reheat Control) w/ Higher Heating Flow Setpoint

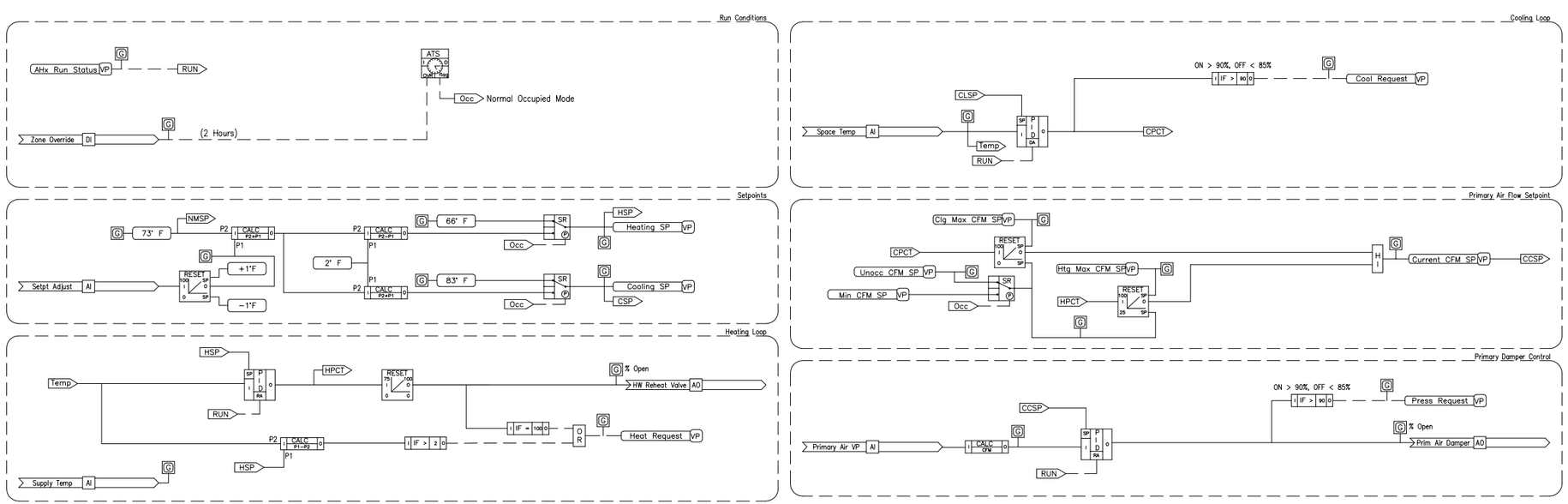

Software Logic Diagram

POINTS LIST

ADDRESS	POINT DESCRIPTOR	DI	AI	DO	AO	VP	REMARKS
	Space Temp		•				
	Prim Air Damper				•		
	Primary Air VP		•				
	Supply Air Temp		•				
	HW Reheat Valve				•		
	Setpoint Adjust		•				
	Zone Override		•				

LOGIC VARIABLES

BINARY	ANALOG	DESCRIPTION
Occ		ON WHEN OCCUPIED MODE ACTIVE
RUN		ON WHEN UNIT COMMANDED TO START
	Temp	VARIABLE VALUE OF SPACE TEMPERATURE
	HSP	VARIABLE CALCULATED VALUE OF ACTIVE HEATING SETPOINT
	CSP	VARIABLE CALCULATED VALUE OF ACTIVE COOLING SETPOINT
	CCSP	VARIABLE CALCULATED VALUE OF CURRENT CFM SETPOINT
	CPCT	VARIABLE CALCULATED VALUE OF COOLING LOOP OUTPUT (%)
	HPCT	VARIABLE CALCULATED VALUE OF HEATING LOOP OUTPUT (%)
	NMSP	VARIABLE VALUE OF NOMINAL (BASE) SPACE TEMPERATURE SETPOINT

REVISIONS

NO.	DESCRIPTION	DATE

THE UNIVERSITY of NORTH CAROLINA at CHAPEL HILL

The University of North Carolina
Chapel Hill, North Carolina

Standard Control Drawings

Eng	HJN
Drawn	KDS
Chkd	---
Appd	---
Issued	5/22/2012
Job No.	----
Scale	N/A
Proj Code	

Revision 2016

Single Duct VAV Box (with HW Reheat Control)

00 OF 00
SHEET NUMBER

C2.01a
DWG NUMBER

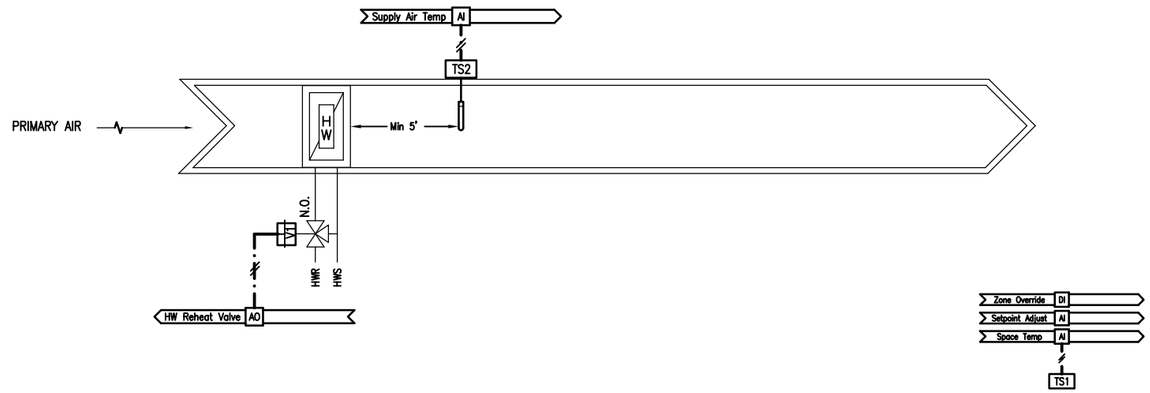

DUCT MOUNTED HW REHEAT COIL

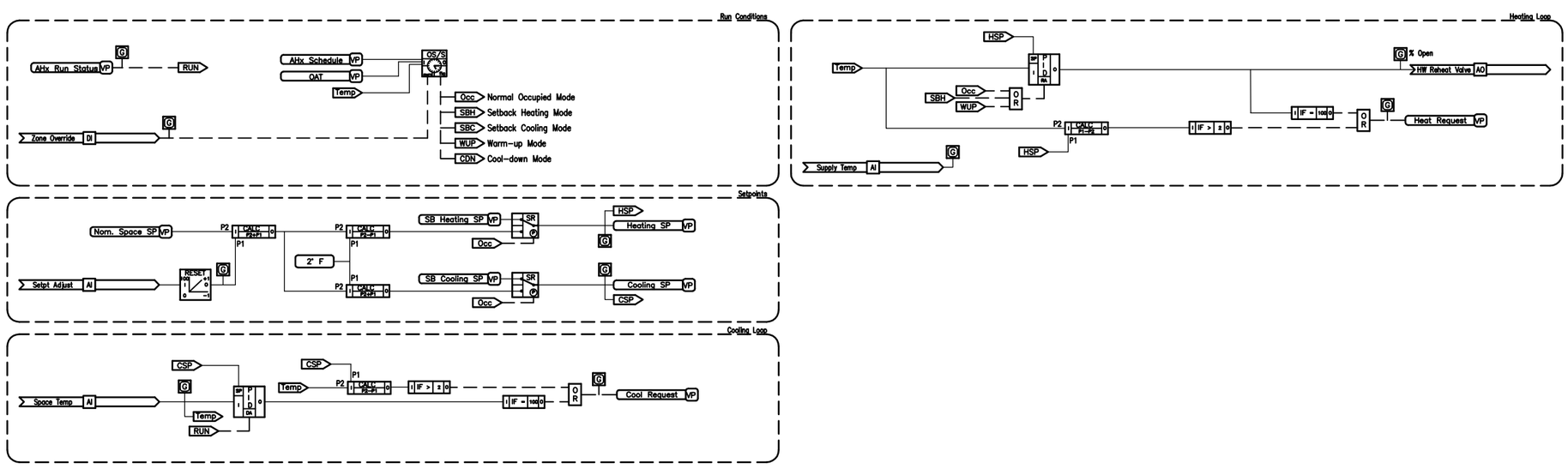

Software Logic Diagram

POINTS LIST

ADDRESS	POINT DESCRIPTOR	DI	AI	DO	AO	VP	REMARKS
	Space Temp		•				
	Setpoint Adjust		•				
	Zone Override		•				
	HW Reheat Valve				•		
	Supply Air Temp		•				

LOGIC VARIABLES

BINARY	ANALOG	DESCRIPTION
Occ		ON WHEN OCCUPIED MODE ACTIVE
RUN		ON WHEN UNIT COMMANDED TO START
SBH		ON WHEN SETBACK HEATING MODE ACTIVE
SBC		ON WHEN SETBACK COOLING MODE ACTIVE
WUP		ON WHEN WARM-UP MODE ACTIVE
CDN		ON WHEN COOL-DOWN MODE ACTIVE
	Temp	VARIABLE VALUE OF SPACE TEMPERATURE
	HSP	VARIABLE CALCULATED VALUE OF ACTIVE HEATING SETPOINT
	CSP	VARIABLE CALCULATED VALUE OF ACTIVE COOLING SETPOINT
	CCSP	VARIABLE CALCULATED VALUE OF CURRENT CFM SETPOINT

REVISIONS

NO.	DESCRIPTION	DATE

THE UNIVERSITY of NORTH CAROLINA at CHAPEL HILL

The University of North Carolina
Chapel Hill, North Carolina

Standard Control Drawings

Eng	HJN
Drawn	HJN
Chkd	----
Appd	----
Issued	
Job No.	----
Scale	N/A
Proj Code	

Revision 2014

DUCT MOUNTED HW REHEAT COIL AND HUMIDIFIER

00 OF 00
SHEET NUMBER

C-2.02

DWG NUMBER

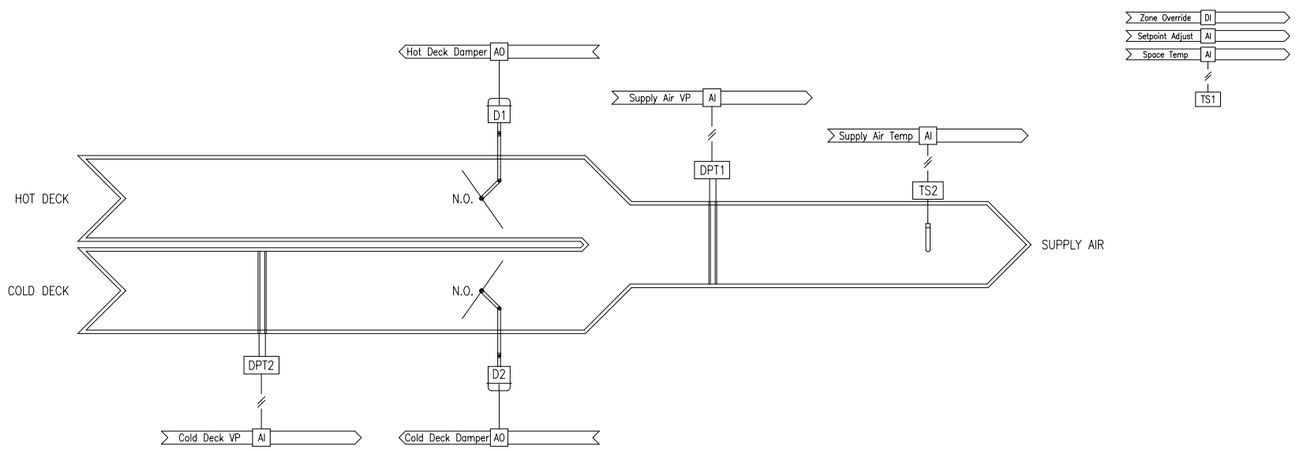

POINTS LIST

ADDRESS	POINT DESCRIPTOR	POINT TYPE DI	AI	DO	AO	VP	REMARKS
	Space Temp		•				
	Cold Deck Damper				•		
	Cold Deck VP		•				
	Supply Air Temp		•				
	Hot Deck Damper				•		
	Supply Air VP		•				
	Setpoint Adjust		•				
	Zone Override		•				

LOGIC VARIABLES

BINARY	ANALOG	DESCRIPTION
Occ		ON WHEN OCCUPIED MODE ACTIVE
RUN		ON WHEN UNIT COMMANDED TO START
SBH		ON WHEN SETBACK HEATING MODE ACTIVE
SBC		ON WHEN SETBACK COOLING MODE ACTIVE
WUP		ON WHEN WARM-UP MODE ACTIVE
CDN		ON WHEN COOL-DOWN MODE ACTIVE
	Temp	VARIABLE VALUE OF SPACE TEMPERATURE
	HSP	VARIABLE CALCULATED VALUE OF ACTIVE HEATING SETPOINT
	CSP	VARIABLE CALCULATED VALUE OF ACTIVE COOLING SETPOINT
	CDSP	VARIABLE CALCULATED VALUE OF CURRENT COLD DECK CFM SETPOINT
	SASP	VARIABLE CALCULATED VALUE OF CURRENT TOTAL SUPPLY CFM SETPOINT
	HDD	VARIABLE CALCULATED VALUE OF HOT DECK DAMPER POSITION

REVISIONS

NO.	DESCRIPTION	DATE

THE UNIVERSITY of NORTH CAROLINA at CHAPEL HILL

DUAL DUCT VAV BOX CONTROL

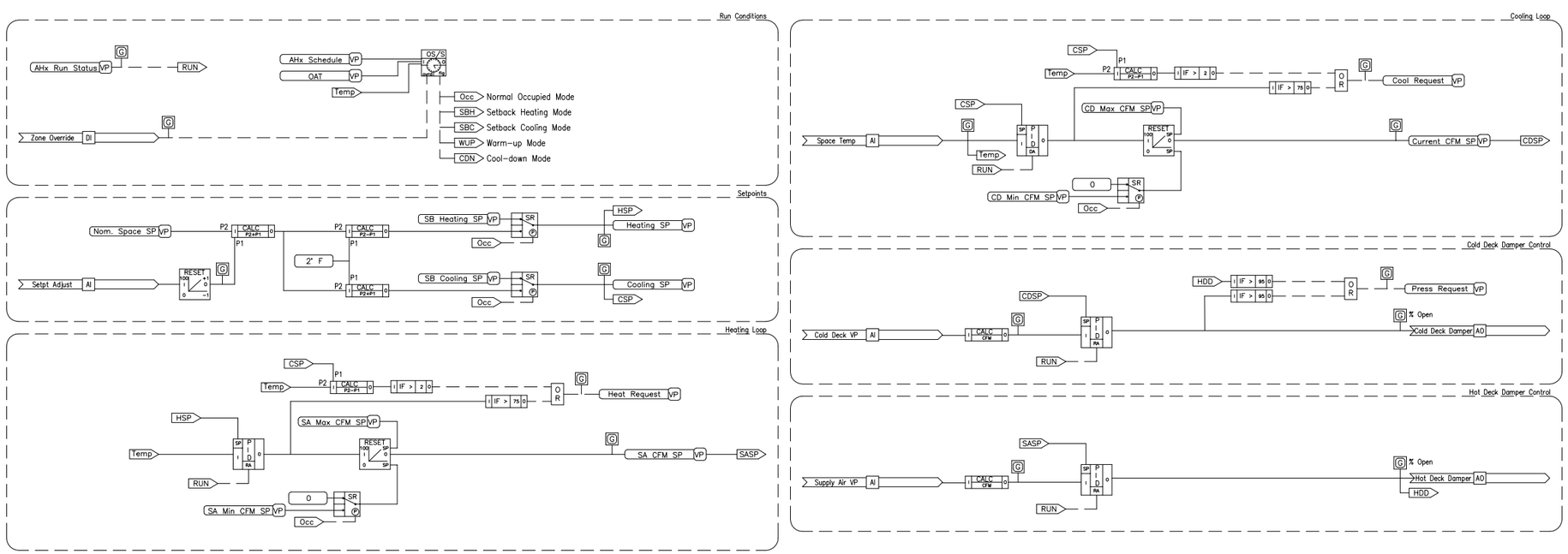

Software Logic Diagram

The University of North Carolina
Chapel Hill, North Carolina

Standard Control Drawings

Eng	KDS
Drawn	HJN
Chkd	---
Appd	---
Issued	
Job No.	----
Scale	N/A
Proj Code	

100% Design Review (REV 3)

DUAL DUCT VAV BOX CONTROL

00 OF 00
SHEET NUMBER

C-2.03
DWG NUMBER

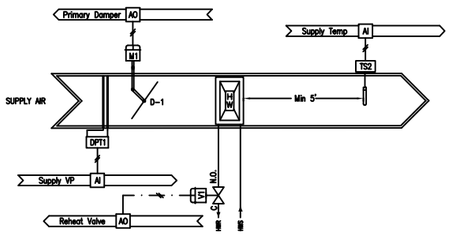

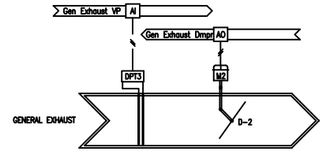

NOTES

1. Provide a single controller for each Flow Tracking Zone. Broadcasting flow setpoints between separate controllers at each Supply or Exhaust valve is not acceptable.
2. Provide a single graphic for each flow tracking zone that depicts all equipment and devices in the zone. Show all values and setpoints as indicated in the logic diagram below.

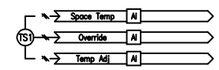

POINTS LIST

ADDRESS	POINT DESCRIPTOR	POINT TYPE DI	AI	DO	AO	VP	REMARKS
	Override	•					
	Space Temp		•				
	Temp Adj		•				
	Space Humidity		•				
	Supply VP		•				
	Primary Damper				•		
	Supply Temp		•				
	Reheat Valve				•		
	Gen Exhaust VP		•				
	Gen Exhaust Dmpr				•		

LOGIC VARIABLES

BINARY	ANALOG	DESCRIPTION
Occ		ON WHEN OCCUPIED MODE IS ACTIVE
STBK		ON WHEN AHU IN SETBACK MODE
STE		ON WHEN ZONE IS SET TO SUPPLY FLOW SETPOINT TRACKS EXHAUST FLOW
	Temp	VARIABLE VALUE OF SPACE TEMPERATURE
	HTSP	VARIABLE CALCULATED VALUE OF EFFECTIVE HEATING SETPOINT
	CLSP	VARIABLE CALCULATED VALUE OF EFFECTIVE COOLING SETPOINT
	GXFL	VARIABLE CALCULATED VALUE OF GENERAL EXHAUST FLOW (CFM)
	SPFL	VARIABLE CALCULATED VALUE OF SUPPLY FLOW (CFM)
	ZFO	VARIABLE CALCULATED VALUE OF ZONE FLOW OFFSET
	ZSSP	VARIABLE CALCULATED VALUE OF ZONE SUPPLY FLOW SETPOINT
	ZESP	VARIABLE CALCULATED VALUE OF ZONE EXHAUST FLOW SETPOINT
Run		ON WHEN SUPPLY AIR SOURCE (AHUs) IS PROVEN ON

LAB VAV SUPPLY & EXHAUST FLOW TRACKING

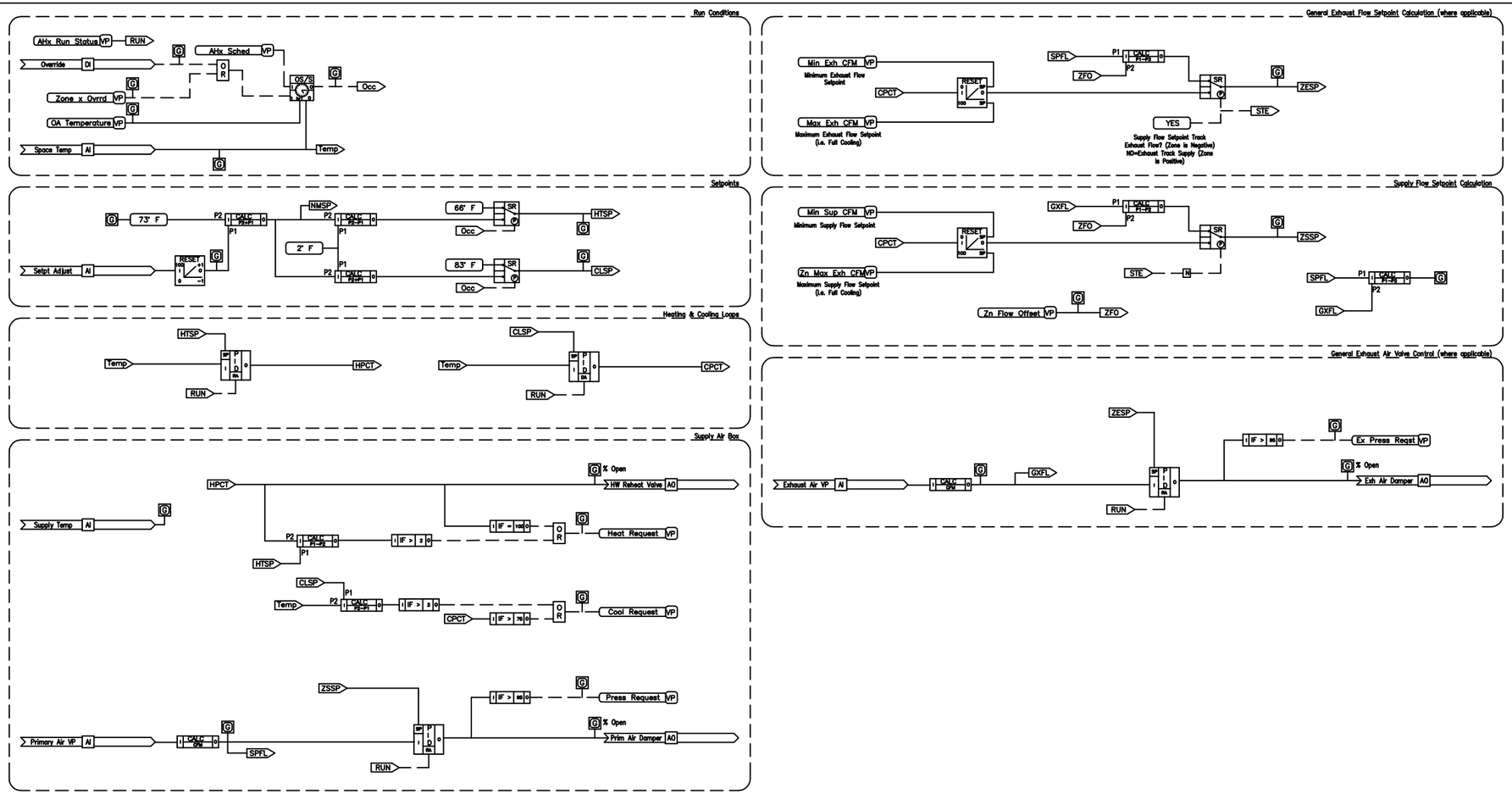

REVISIONS

NO.	DESCRIPTION	DATE

THE UNIVERSITY of NORTH CAROLINA at CHAPEL HILL

The University of North Carolina
Chapel Hill, North Carolina

Standard Control Drawings

Eng	KDS
Drawn	KDS
Chkd	---
Appd	---
Issued	08/19/2014
Job No.	-----
Scale	N/A
Proj Code	

Revision 2016

LAB FLOW TRACKING ZONE

00 OF 00
SHEET NUMBER

C-2.04
DWG NUMBER

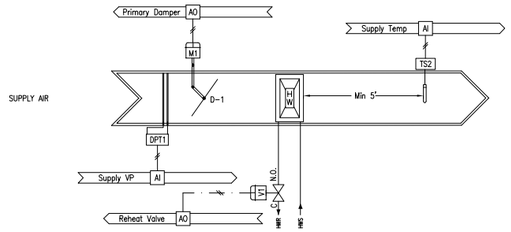

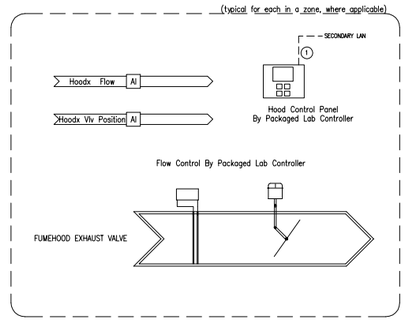

NOTES

1. Provide digital interface to the control system for diagnostic point Information. Required points to be mapped Include: Hood cfm, Master Alarm, Volume/Velocity Reset & Sash Position. Hood Flow point to be hardwired to the BAS for flow calculation of General Exhaust and Supply Air Valves
2. Emergency Purge Buttons located as shown on the floor plans. Typical for each open lab (not just a particular zone in an open lab) will go to the emergency purge mode when any button In that open lab Is pressed.
3. Provide a single controller for each Flow Tracking Zone. Broadcasting flow setpoints between separate controllers at each Supply or Exhaust valve Is not acceptable.
4. Provide a single graphic for each flow tracking zone that depicts all equipment and devices in the zone. Show all values and setpoints as Indicated In the logic diagram below. Provide links to the fume hood controllers from the tracking zone graphic, as applicable.

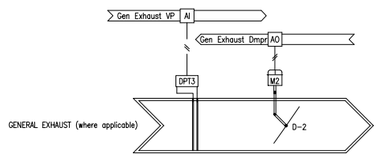

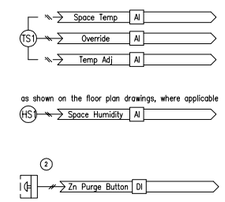

LAB VAV FLOW TRACKING with HOOD

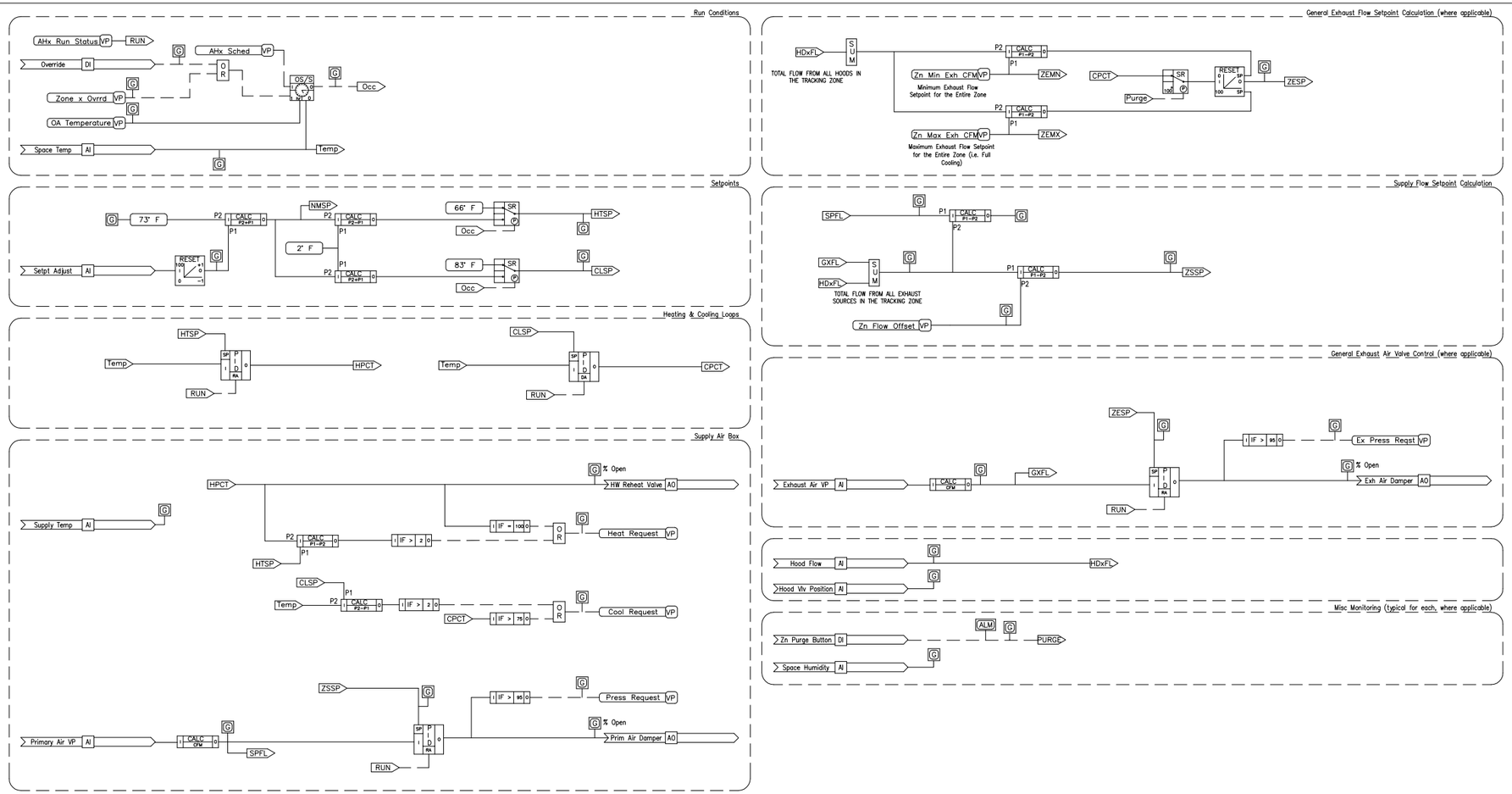

POINTS LIST

ADDRESS	POINT DESCRIPTOR	POINT TYPE DI	AI	DO	AO	VP	REMARKS
	Override	•					
	Space Temp		•				
	Temp Adj		•				
	Space Humidity		•				
	Supply VP		•				
	Primary Damper				•		
	Supply Temp		•				
	Reheat Valve				•		
	Gen Exhaust VP		•				
	Gen Exhaust Dmpr				•		
	Snk Exhaust VP		•				
	Snk Exhaust Dmpr				•		
	Hood x Flow		•				
	Emergency Purge Button	•					

LOGIC VARIABLES

BINARY	ANALOG	DESCRIPTION
Occ		ON WHEN OCCUPIED MODE IS ACTIVE
STBK		ON WHEN AHU IN SETBACK MODE
PURGE		ON WHEN ZONE PURGE BUTTON IS ENABLED
	Temp	VARIABLE VALUE OF SPACE TEMPERATURE
	HTSP	VARIABLE CALCULATED VALUE OF EFFECTIVE HEATING SETPOINT
	CLSP	VARIABLE CALCULATED VALUE OF EFFECTIVE COOLING SETPOINT
	HDxFL	VARIABLE CALCULATED VALUE OF HOOD EXHAUST FLOW (CFM) FOR HOOD x
	GXFL	VARIABLE CALCULATED VALUE OF GENERAL EXHAUST FLOW (CFM)
	SPFL	VARIABLE CALCULATED VALUE OF SUPPLY FLOW (CFM)x
	ZSSP	VARIABLE CALCULATED VALUE OF ZONE TOTAL SUPPLY FLOW SETPOINT
Run		ON WHEN SUPPLY AIR SOURCE (AHUx) IS PROVEN ON

REVISIONS

NO.	DESCRIPTION	DATE

THE UNIVERSITY of NORTH CAROLINA at CHAPEL HILL

The University of North Carolina
Chapel Hill, North Carolina

Standard Control Drawings

Eng	KDS
Drawn	KDS
Chkd	---
Appd	---
Issued	08/19/2014
Job No.	----
Scale	N/A
Proj Code	

Revision 2016

LAB FLOW TRACKING ZONE WITH HOOD

00 OF 00
SHEET NUMBER

C-2.05

DWG NUMBER

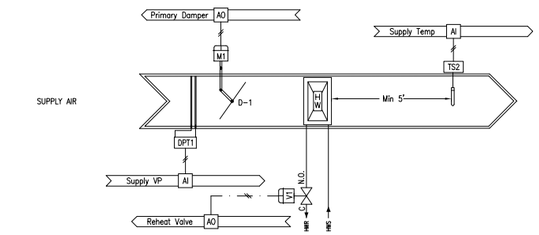

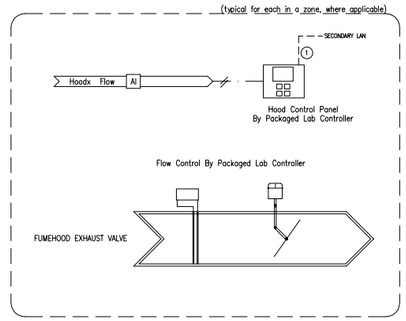

NOTES

1. Provide digital interface to the control system for diagnostic point Information. Required points to be mapped Include: Hood cfm, Master Alarm, Volume/Velocity Reset & Sash Position. Hood Flow point to be hardwired to the BAS for flow calculation of General Exhaust and Supply Air Valves
2. Emergency Purge Buttons located as shown on the floor plans. Typical for each open lab (not just a particular zone in an open lab) will go to the emergency purge mode when any button In that open lab Is pressed.
3. Provide a single controller for each Flow Tracking Zone. Broadcasting flow setpoints between separate controllers at each Supply or Exhaust valve Is not acceptable.
4. Provide a single graphic for each flow tracking zone that depicts all equipment and devices in the zone. Show all values and setpoints as Indicated In the logic diagram below. Provide links to the fume hood controllers from the tracking zone graphic, as applicable.

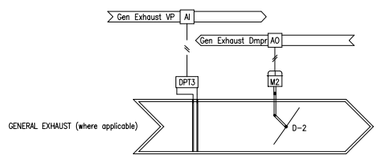

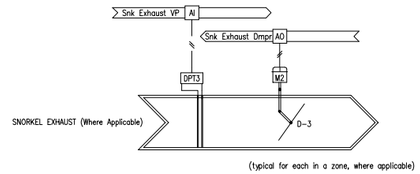

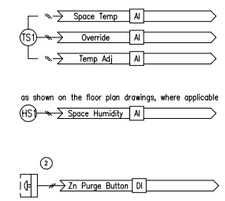

POINTS LIST

ADDRESS	POINT DESCRIPTOR	POINT TYPE DI	AI	DO	AO	VP	REMARKS
	Override	•					
	Space Temp		•				
	Temp Adj		•				
	Space Humidity		•				
	Supply VP		•				
	Primary Damper				•		
	Supply Temp		•				
	Reheat Valve				•		
	Gen Exhaust VP		•				
	Gen Exhaust Dmpr				•		
	Snk Exhaust VP		•				
	Snk Exhaust Dmpr				•		
	Hood x Flow		•				
	Emergency Purge Button	•					

LOGIC VARIABLES

BINARY	ANALOG	DESCRIPTION
Occ		ON WHEN OCCUPIED MODE IS ACTIVE
STBK		ON WHEN AHU IN SETBACK MODE
PURGE		ON WHEN ZONE PURGE BUTTON IS ENABLED
	Temp	VARIABLE VALUE OF SPACE TEMPERATURE
	HTSP	VARIABLE CALCULATED VALUE OF EFFECTIVE HEATING SETPOINT
	CLSP	VARIABLE CALCULATED VALUE OF EFFECTIVE COOLING SETPOINT
	HDxFL	VARIABLE CALCULATED VALUE OF HOOD EXHAUST FLOW (CFM) FOR HOOD x
	GXFL	VARIABLE CALCULATED VALUE OF GENERAL EXHAUST FLOW (CFM)
	SPFL	VARIABLE CALCULATED VALUE OF SUPPLY FLOW (CFM)x
	SNxFL	VARIABLE CALCULATED VALUE OF SNORKEL EXHAUST FLOW (CFM) FOR SNKL x
	ZSSP	VARIABLE CALCULATED VALUE OF ZONE TOTAL SUPPLY FLOW SETPOINT
Run		ON WHEN SUPPLY AIR SOURCE (AHUs) IS PROVEN ON

LAB VAV FLOW TRACKING WITH HOOD & SNORKLE

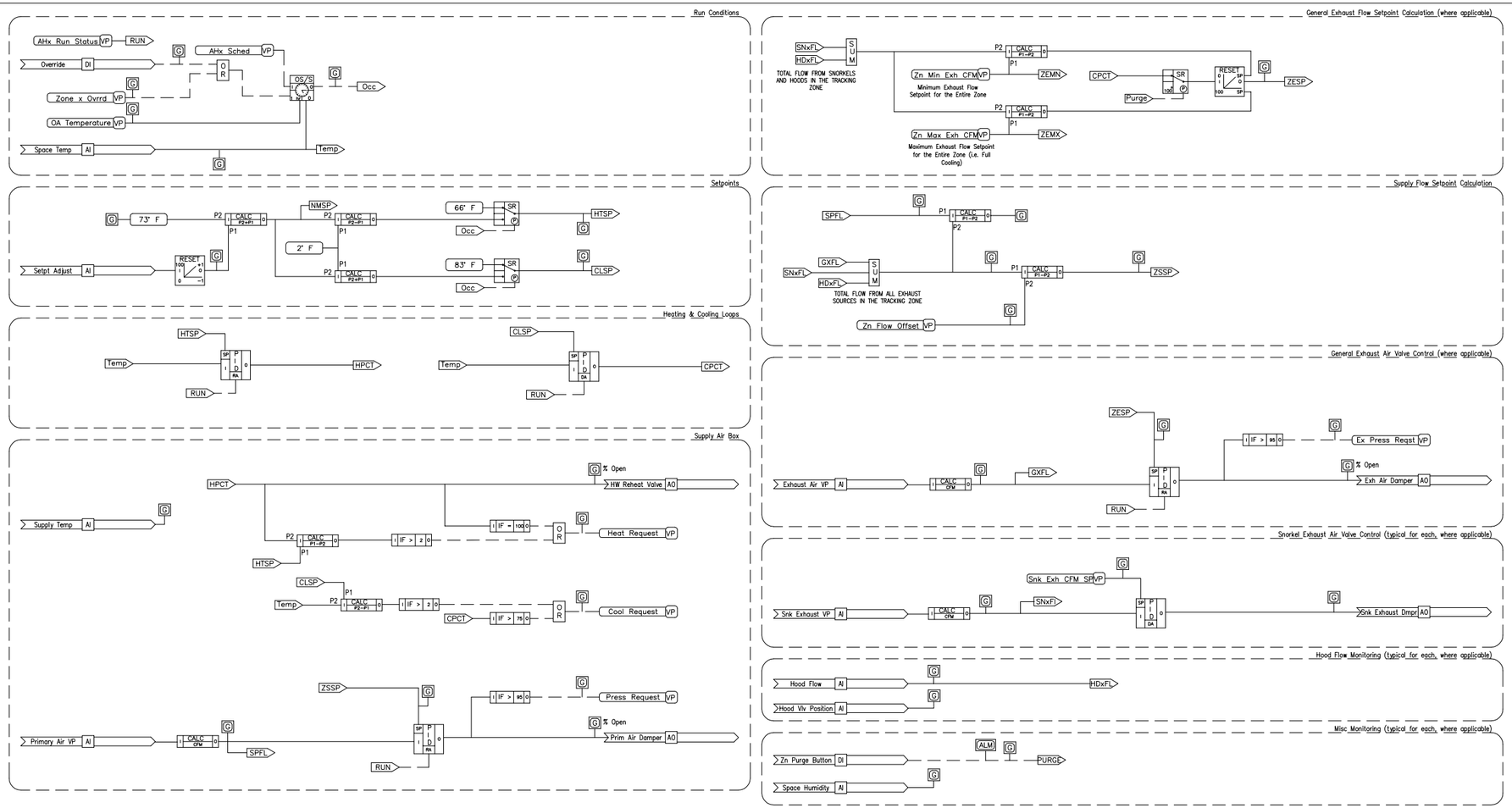

REVISIONS

NO.	DESCRIPTION	DATE

THE UNIVERSITY of NORTH CAROLINA at CHAPEL HILL

The University of North Carolina
Chapel Hill, North Carolina

Standard Control Drawings

Eng	KDS
Drawn	KDS
Chkd	---
Appd	---
Issued	08/19/2014
Job No.	----
Scale	N/A
Proj Code	

Revision 2016

LAB FLOW TRACKING ZONE WITH HOOD & SNORKLE

00 OF 00
SHEET NUMBER

C-2.06

DWG NUMBER

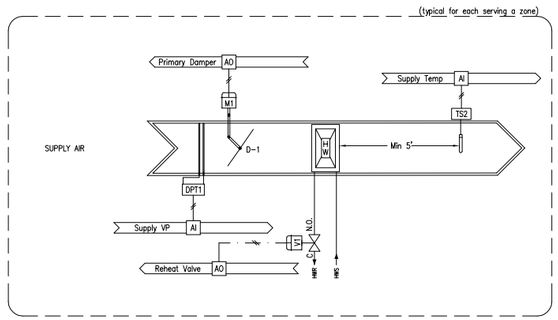

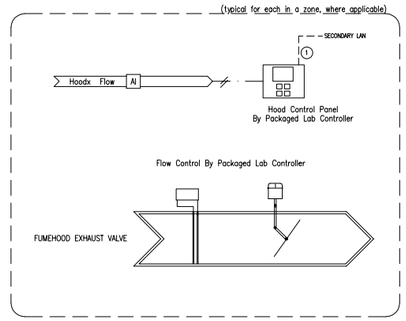

NOTES

1. Provide digital interface to the control system for diagnostic point Information. Required points to be mapped Include: Hood cfm, Master Alarm, Volume/Velocity Reset & Sash Position. Hood Flow point to be hardwired to the BAS for flow calculation of General Exhaust and Supply Air Valves
2. Emergency Purge Buttons located as shown on the floor plans. Typical for each open lab (not just a particular zone in an open lab) will go to the emergency purge mode when any button in that open lab is pressed.
3. Provide a single controller for each Flow Tracking Zone. Broadcasting flow setpoints between separate controllers at each Supply or Exhaust valve is not acceptable.
4. Provide a single graphic for each flow tracking zone that depicts all equipment and devices in the zone. Show all values and setpoints as indicated in the logic diagram below. Provide links to the fume hood controllers from the tracking zone graphic, as applicable.

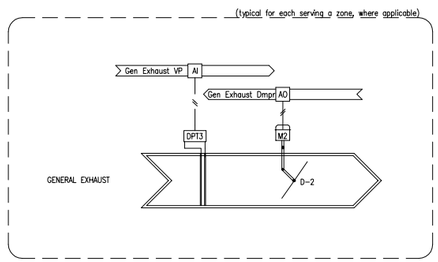

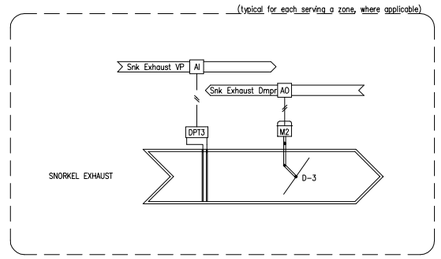

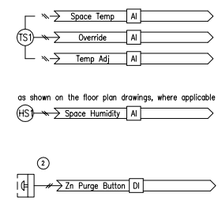

POINTS LIST

ADDRESS	POINT DESCRIPTOR	POINT TYPE DI	AI	DO	AO	VP	REMARKS
	Override	•					
	Space Temp		•				
	Temp Adj		•				
	Space Humidity		•				
	Supply VP		•				
	Primary Damper				•		
	Supply Temp		•				
	Reheat Valve				•		
	Gen Exhaust VP		•				
	Gen Exhaust Dmpr				•		
	Snk Exhaust VP		•				
	Snk Exhaust Dmpr				•		
	Hood x Flow		•				
	Emergency Purge Button	•					

LOGIC VARIABLES

BINARY	ANALOG	DESCRIPTION
Occ>		ON WHEN OCCUPIED MODE IS ACTIVE
STBK>		ON WHEN AHU IN SETBACK MODE
PURGE>		ON WHEN ZONE PURGE BUTTON IS ENABLED
	Temp>	VARIABLE VALUE OF SPACE TEMPERATURE
	HTSP>	VARIABLE CALCULATED VALUE OF EFFECTIVE HEATING SETPOINT
	CLSP>	VARIABLE CALCULATED VALUE OF EFFECTIVE COOLING SETPOINT
	HDxFL>	VARIABLE CALCULATED VALUE OF HOOD EXHAUST FLOW (CFM) FOR HOOD x
	GXxFL>	VARIABLE CALCULATED VALUE OF GENERAL EXHAUST FLOW (CFM) FOR VALVE x
	SPxFL>	VARIABLE CALCULATED VALUE OF SUPPLY FLOW (CFM) FOR SUPPLY VALVE x
	SPCT>	VARIABLE CALCULATED VALUE OF SUPPLY FLOW SETPOINT % FOR EACH VALVE
	ZSSP>	VARIABLE CALCULATED VALUE OF ZONE TOTAL SUPPLY FLOW SETPOINT
	ZSMN>	VARIABLE CALCULATED VALUE OF ZONE TOTAL SUPPLY SCHEDULED MIN SETPT
	ZSMX>	VARIABLE CALCULATED VALUE OF ZONE TOTAL SUPPLY SCHEDULED MAX SETPT
	EPCT>	VARIABLE CALCULATED VALUE OF EXHASUT FLOW SETPOINT % FOR EACH VALVE
	ESMN>	VARIABLE CALCULATED VALUE OF ZONE TOTAL EXHAUST MIN SETPOINT
	ESMX>	VARIABLE CALCULATED VALUE OF ZONE TOTAL EXHAUST MAX SETPOINT
Run>		ON WHEN SUPPLY AIR SOURCE (AHUs) IS PROVEN ON
	SNxFL>	VARIABLE CALCULATED VALUE OF SNORKEL EXHAUST FLOW (CFM) FOR SNKL x

LAB VAV FLOW TRACKING – MULTI ZONE

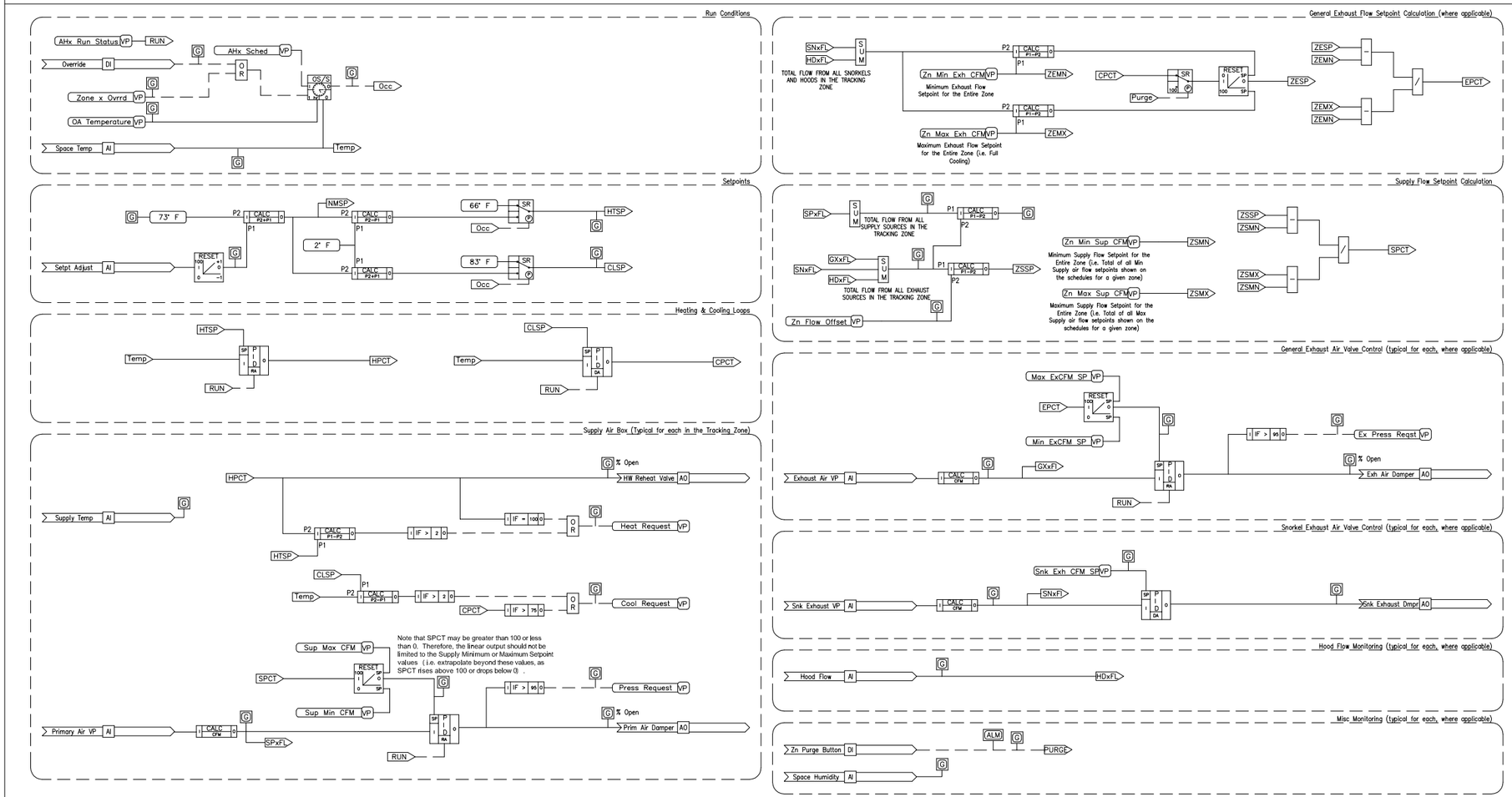

REVISIONS

NO.	DESCRIPTION	DATE

THE UNIVERSITY of NORTH CAROLINA at CHAPEL HILL

The University of North Carolina
Chapel Hill, North Carolina

Standard Control Drawings

Eng	KDS
Drawn	KDS
Chkd	---
Appd	---
Issued	08/19/2014
Job No.	----
Scale	N/A
Proj Code	

Revision 2016

LAB FLOW TRACKING MULTI ZONE

00 OF 00
SHEET NUMBER

C2.07

DWG NUMBER

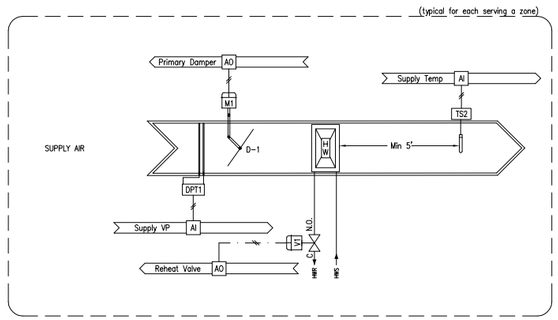

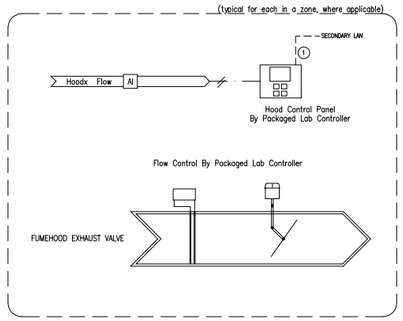

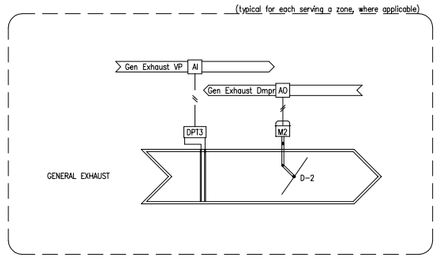

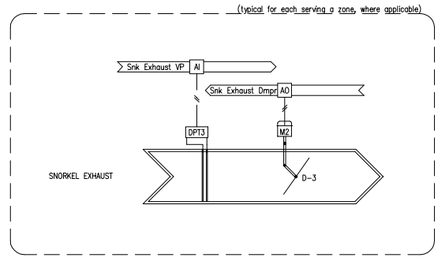

NOTES

1. Provide digital interface to the control system for diagnostic point information. Required points to be mapped include: Hood cfm, Master Alarm, Volume/Velocity Reset & Sash Position. Hood Flow point to be hardwired to the BAS for flow calculation of General Exhaust and Supply Air Valves
2. Emergency Purge Buttons (if required) located as shown on the floor plans. Typical for each open lab (not just a particular zone in an open lab) will go to the emergency purge mode when any button in that open lab is pressed.
3. Provide a single controller for each Flow Tracking Zone. Broadcasting flow setpoints between separate controllers at each Supply or Exhaust valve is not acceptable.
4. Provide a single graphic for each flow tracking zone that depicts all equipment and devices in the zone. Show all values and setpoints as indicated in the logic diagram below. Provide links to the fume hood controllers from the tracking zone graphic, as applicable.
5. Drawing applies to entire open lab. i.e. Each open lab is considered a single flow tracking zone.
6. Average all zone sensors in a flow tracking zone. Use average zone temperature as controlling input for space temperature control. Provide software logic that will allow the system operator to exclude any individual zone temperature sensors from the averaging calculations through the head end. This should be accomplished without the need to modify or download a new program
7. Provide only 1 zone sensor in each open lab/ flow tracking zone with setpoint adjust and override. All other sensors shall have space temperature only. Locations of the zone sensors with setpoint adjust and override shall be labeled and shown on the floor plans.

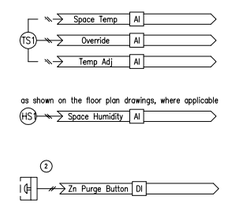

POINTS LIST

ADDRESS	POINT DESCRIPTOR	POINT TYPE DI	AI	DO	AO	VP	REMARKS
	Override	•					
	Space Temp		•				
	Temp Adj		•				
	Space Humidity		•				
	Supply VP		•				
	Primary Damper				•		
	Supply Temp		•				
	Reheat Valve				•		
	Gen Exhaust VP		•				
	Gen Exhaust Dmpr				•		
	Snk Exhaust VP		•				
	Snk Exhaust Dmpr				•		
	Hood x Flow		•				
	Emergency Purge Button	•					

LOGIC VARIABLES

BINARY	ANALOG	DESCRIPTION
Occ>		ON WHEN OCCUPIED MODE IS ACTIVE
STBK>		ON WHEN AHU IN SETBACK MODE
PURGE>		ON WHEN ZONE PURGE BUTTON IS ENABLED
	Temp>	VARIABLE VALUE OF SPACE TEMPERATURE
	HTSP>	VARIABLE CALCULATED VALUE OF EFFECTIVE HEATING SETPOINT
	CLSP>	VARIABLE CALCULATED VALUE OF EFFECTIVE COOLING SETPOINT
	HDxFL>	VARIABLE CALCULATED VALUE OF HOOD EXHAUST FLOW (CFM) FOR HOOD x
	GXxFL>	VARIABLE CALCULATED VALUE OF GENERAL EXHAUST FLOW (CFM) FOR VALVE x
	SPxFL>	VARIABLE CALCULATED VALUE OF SUPPLY FLOW (CFM) FOR SUPPLY VALVE x
	SPCT>	VARIABLE CALCULATED VALUE OF SUPPLY FLOW SETPOINT % FOR EACH VALVE
	ZSSP>	VARIABLE CALCULATED VALUE OF ZONE TOTAL SUPPLY FLOW SETPOINT
	ZSMN>	VARIABLE CALCULATED VALUE OF ZONE TOTAL SUPPLY SCHEDULED MIN SETPT
	ZSMX>	VARIABLE CALCULATED VALUE OF ZONE TOTAL SUPPLY SCHEDULED MAX SETPT
	EPCT>	VARIABLE CALCULATED VALUE OF EXHASUT FLOW SETPOINT % FOR EACH VALVE
	ESMN>	VARIABLE CALCULATED VALUE OF ZONE TOTAL EXHAUST MIN SETPOINT
	ESMX>	VARIABLE CALCULATED VALUE OF ZONE TOTAL EXHAUST MAX SETPOINT
Run>		ON WHEN SUPPLY AIR SOURCE (AHUs) IS PROVEN ON
	SNxFL>	VARIABLE CALCULATED VALUE OF SNORKEL EXHAUST FLOW (CFM) FOR SNKL x

LAB VAV FLOW TRACKING – MULTI ZONE with TERMINAL SUPPLY DAT RESET

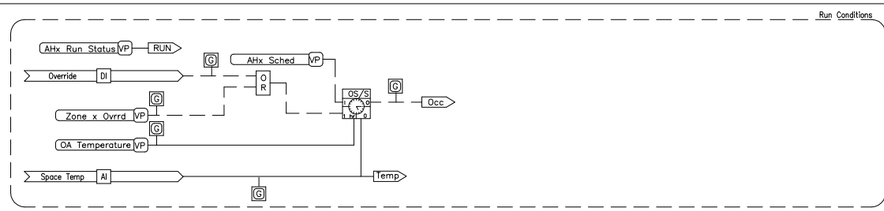

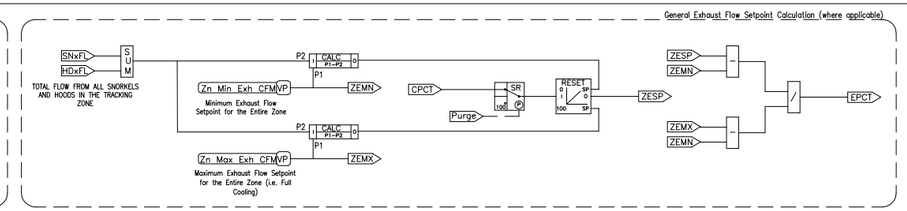

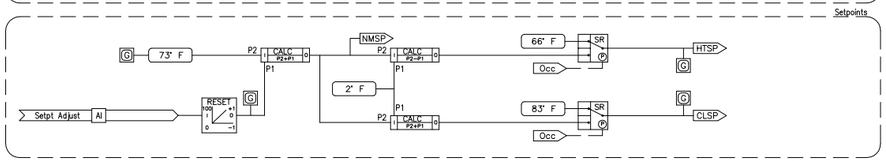

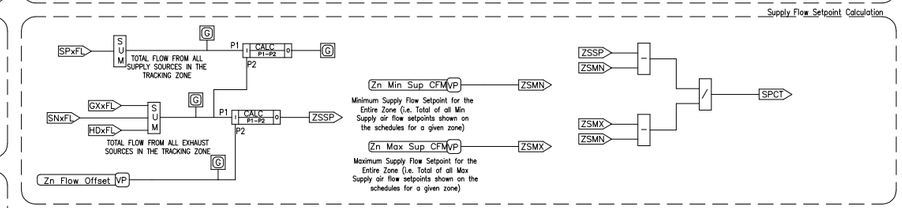

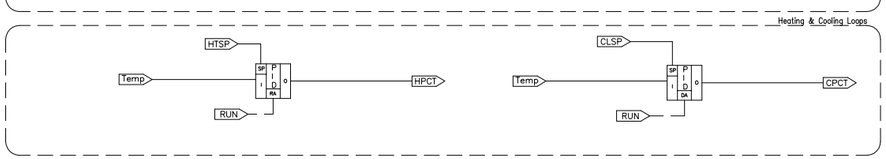

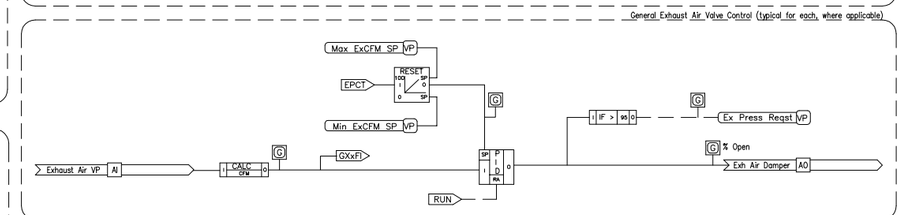

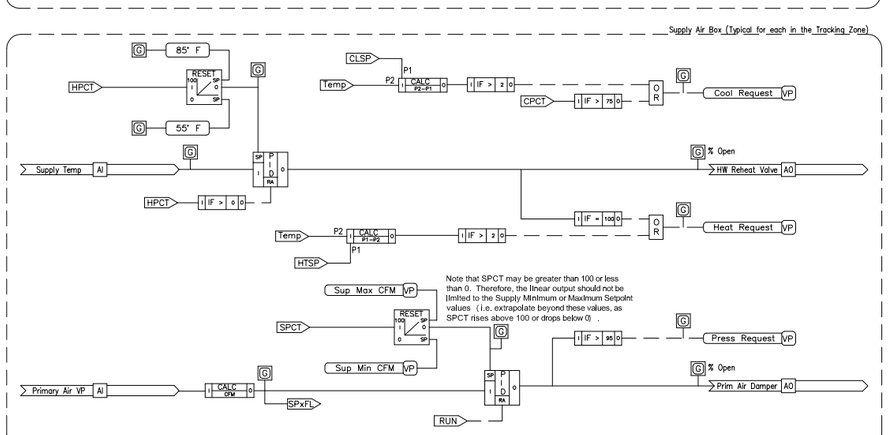

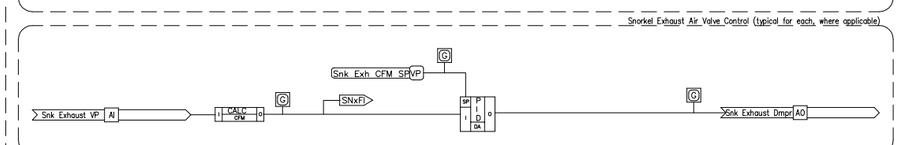

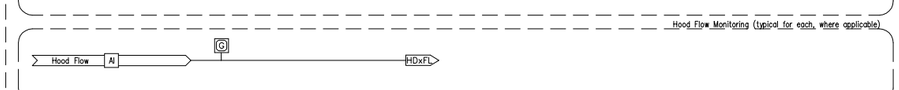

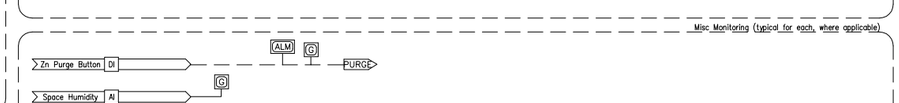

REVISIONS

NO.	DESCRIPTION	DATE

THE UNIVERSITY of NORTH CAROLINA at CHAPEL HILL

The University of North Carolina
Chapel Hill, North Carolina

Standard Control Drawings

Eng	KDS
Drawn	KDS
Chkd	---
Appd	---
Issued	08/19/2014
Job No.	----
Scale	N/A
Proj Code	

Revision 2016

LAB FLOW TRACKING MULTI ZONE

00 OF 00
SHEET NUMBER

C2.07a

DWG NUMBER

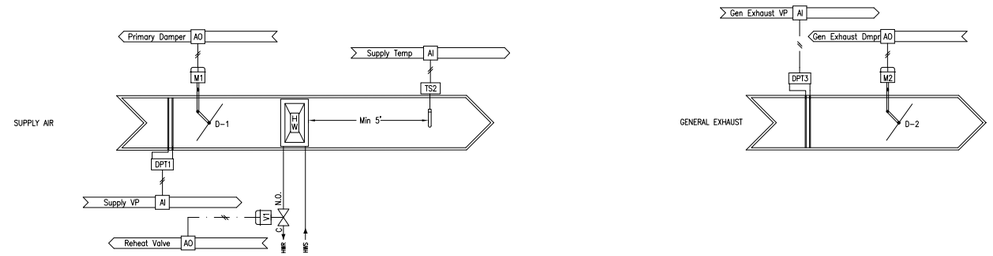

NOTES

1. Provide a single graphic for each CV zone that depicts all equipment and devices in the zone. Show all values and setpoints as indicated in the logic diagram below.

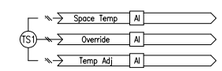

POINTS LIST

ADDRESS	POINT DESCRIPTOR	POINT TYPE DI	AI	DO	AO	VP	REMARKS
	Override	•					
	Space Temp		•				
	Temp Adj		•				
	Space Humidity		•				
	Supply VP		•				
	Primary Damper				•		
	Supply Temp		•				
	Reheat Valve				•		
	Gen Exhaust VP		•				
	Gen Exhaust Dmpr				•		

LOGIC VARIABLES

BINARY	ANALOG	DESCRIPTION
Occ		ON WHEN OCCUPIED MODE IS ACTIVE
STBK		ON WHEN AHU IN SETBACK MODE
	Temp	VARIABLE VALUE OF SPACE TEMPERATURE
	HTSP	VARIABLE CALCULATED VALUE OF EFFECTIVE HEATING SETPOINT
	CLSP	VARIABLE CALCULATED VALUE OF EFFECTIVE COOLING SETPOINT
	GXFL	VARIABLE CALCULATED VALUE OF GENERAL EXHAUST FLOW (CFM)
	SPFL	VARIABLE CALCULATED VALUE OF SUPPLY FLOW (CFM)
Run		ON WHEN SUPPLY AIR SOURCE (AHUs) IS PROVEN ON

LAB CV SUPPLY & EXHAUST ZONE

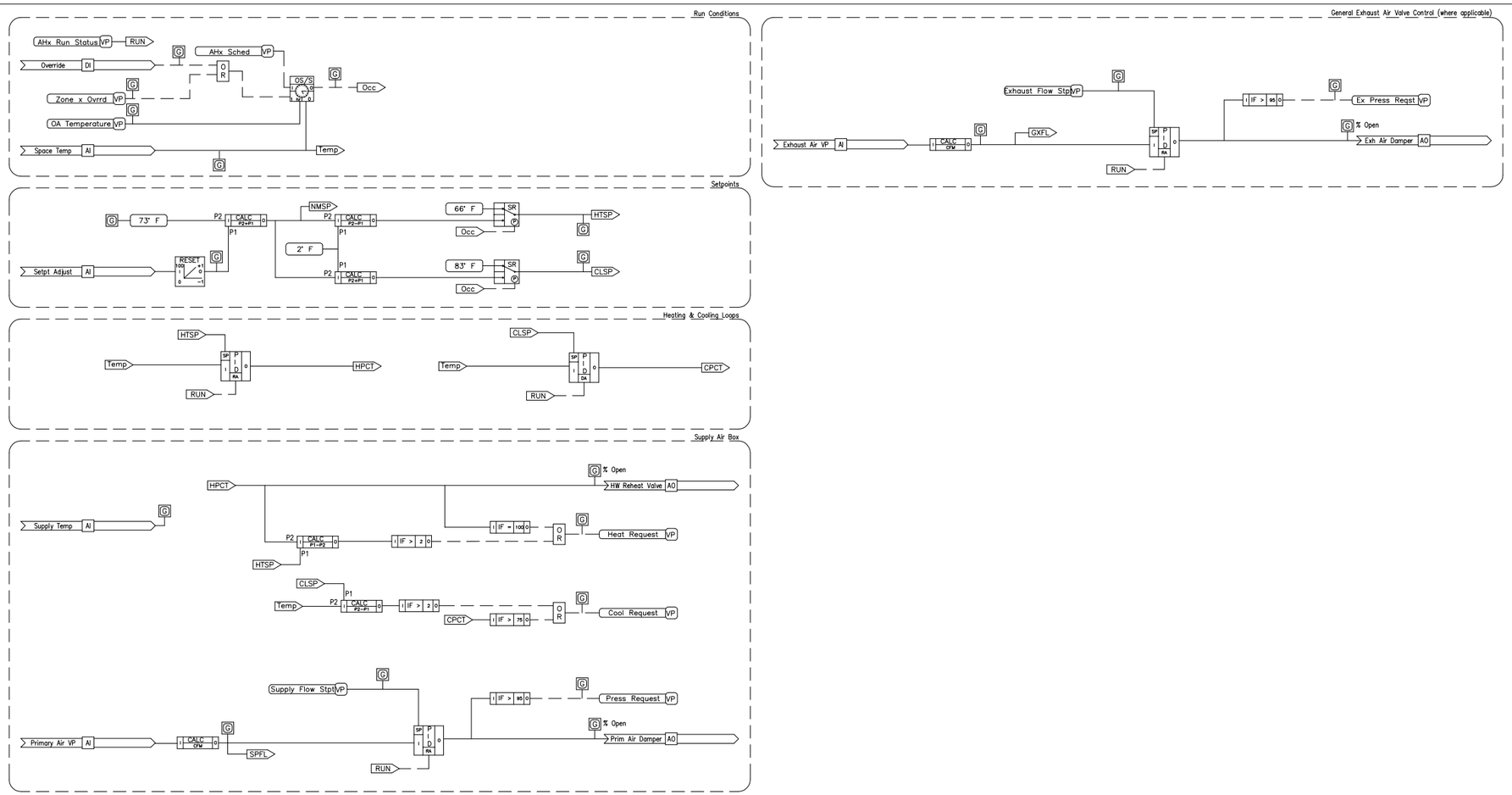

REVISIONS

NO.	DESCRIPTION	DATE

THE UNIVERSITY of NORTH CAROLINA at CHAPEL HILL

The University of North Carolina
Chapel Hill, North Carolina

Standard Control Drawings

Eng	KDS
Drawn	KDS
Chkd	---
Appd	---
Issued	08/19/2014
Job No.	----
Scale	N/A
Proj Code	

Revision 2016

LAB CV ZONE

00 OF 00
SHEET NUMBER

C-2.08

DWG NUMBER

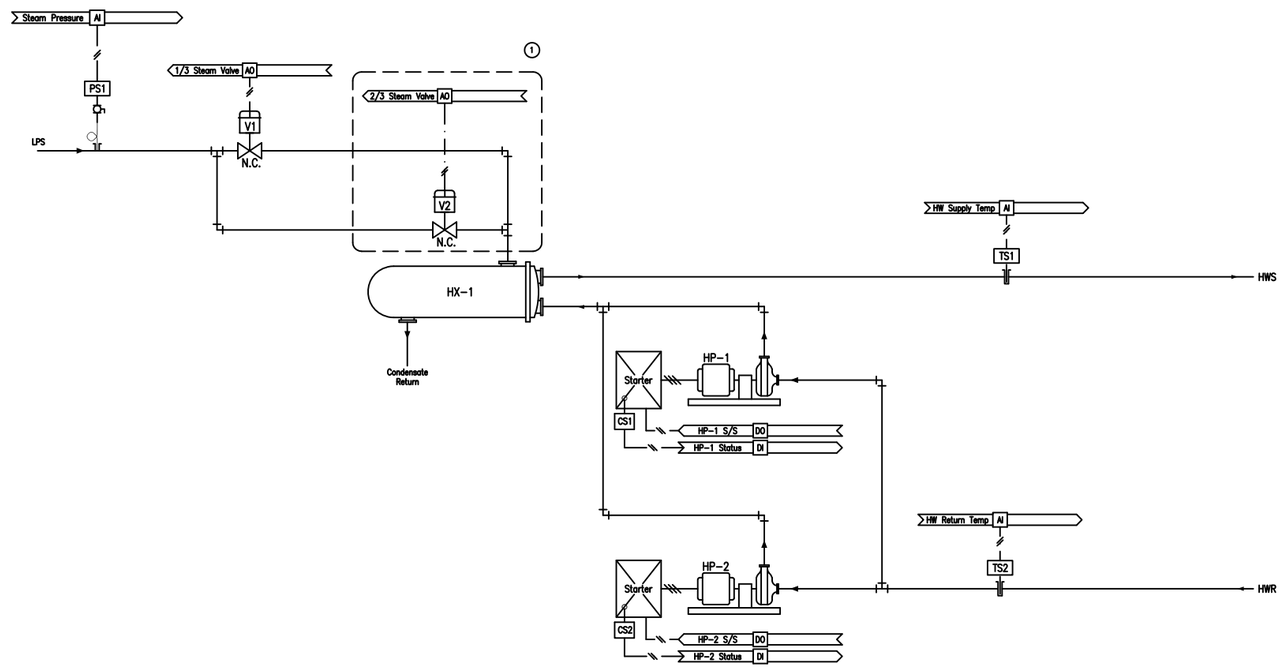

NOTES

1. Include 2/3 valve control only per mechanical design. Typical control will be single steam valve.

POINTS LIST

ADDRESS	POINT DESCRIPTOR	DI	AI	DO	AO	VP	REMARKS
	1/3 Steam Valve				•		
	2/3 Steam Valve				•		See Note 1
	HP-1 S/S			•			
	HP-1 Status	•					
	HP-2 S/S			•			
	HP-2 Status	•					
	HW Supply Temp		•				
	HW Return Temp		•				
	Steam Pressure		•				

LOGIC VARIABLES

BINARY	ANALOG	DESCRIPTION
Sysgo		ON WHEN HEATING SYSTEM IS ENABLED
PxPF		ON WHEN PUMP x STATUS IS PROVEN
PxFL		ON WHEN PUMP x PROOF HAS FAILED
FLOW		ON WHEN EITHER PUMP IS PROVEN
Px		ON WHEN PUMP x IS COMMANDED TO RUN
	OAT	VARIABLE VALUE OF OUTDOOR AIR TEMPERATURE
	PxRT	VARIABLE VALUE OF PUMP x RUNTIME (HH:MM)
	HWSP	VARIABLE CALCULATED VALUE OF HOT WATER SUPPLY TEMPERATURE SETPOINT
	HWS	VARIABLE VALUE OF HOT WATER SUPPLY TEMPERATURE
LoStP		ON WHEN CAMPUS STEAM PRESSURE IS LOW

REVISIONS

NO.	DESCRIPTION	DATE

THE UNIVERSITY of NORTH CAROLINA at CHAPEL HILL

The University of North Carolina
Chapel Hill, North Carolina

Standard Control Drawings

Eng	RR
Drawn	RR
Chkd	---
Appd	---
Issued	
Job No.	----
Scale	N/A
Proj Code	

Review 2021

STEAM TO HW CONVERTER WITH CV PUMPS

00 OF 00
SHEET NUMBER

C-3.00
DWG NUMBER

STEAM TO HW CONVERTER WITH CV PUMPS

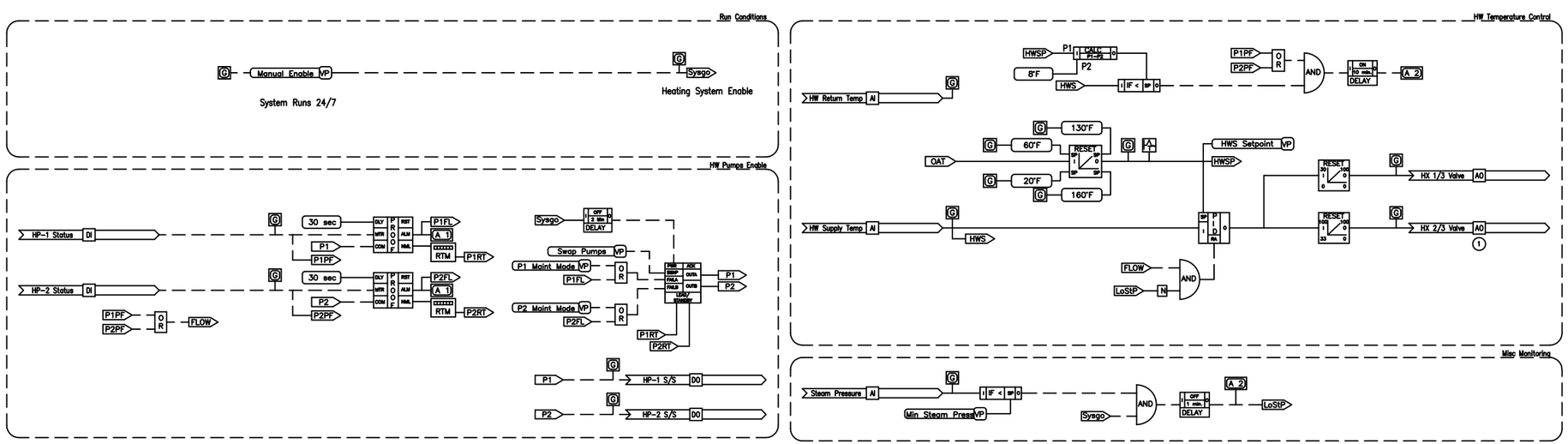

Software Logic Diagram

ELECTRIC LADDER DIAGRAMS

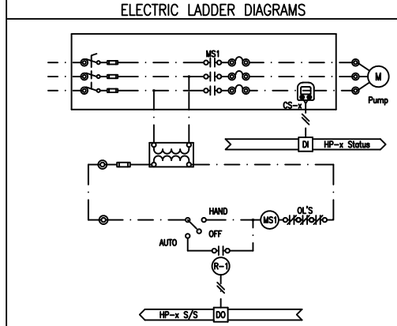

Typical Pump Starter

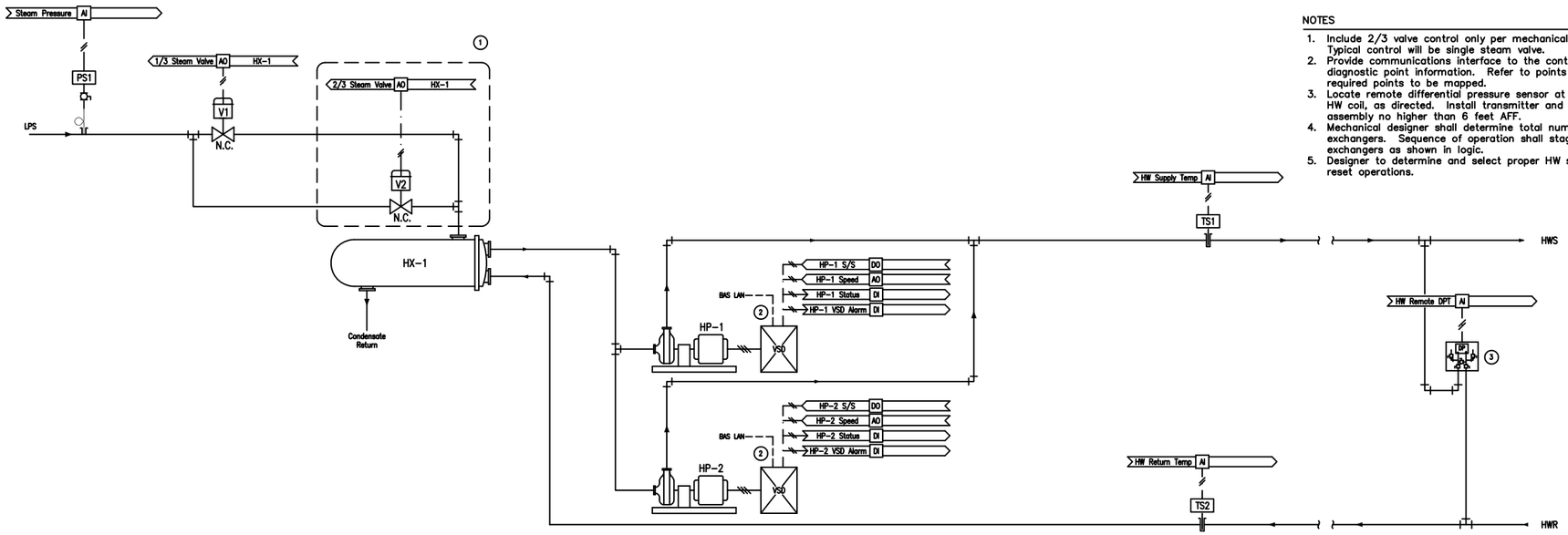

NOTES

1. Include 2/3 valve control only per mechanical design. Typical control will be single steam valve.
2. Provide communications interface to the control system for diagnostic point information. Refer to points list for required points to be mapped.
3. Locate remote differential pressure sensor at most remote HW coil, as directed. Install transmitter and bypass assembly no higher than 6 feet AFF.
4. Mechanical designer shall determine total number of heat exchangers. Sequence of operation shall stage through exchangers as shown in logic.
5. Designer to determine and select proper HW set points for reset operations.

STEAM TO HW CONVERTER WITH VV PUMPS

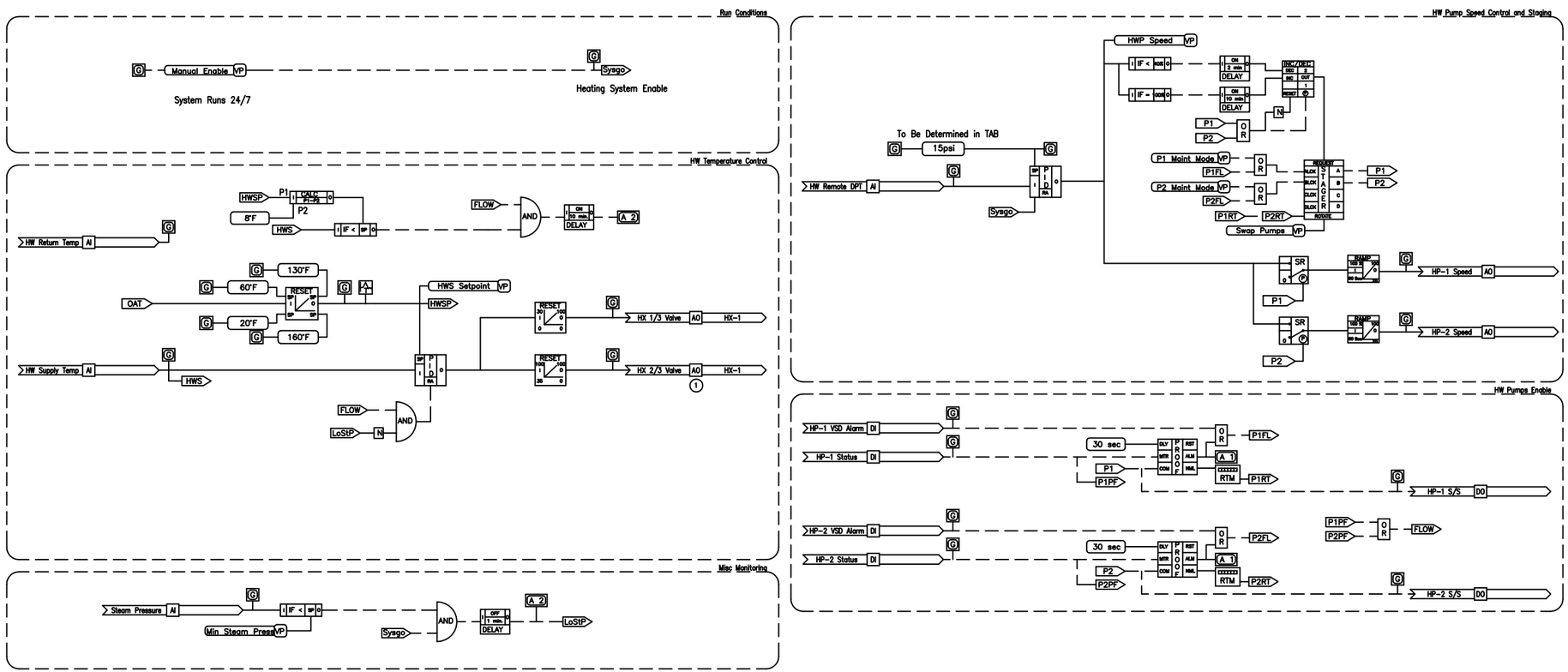

Software Logic Diagram

POINTS LIST

ADDRESS	POINT DESCRIPTOR	POINT TYPE DI	AI	DO	AO	VP	REMARKS
	1/3 Steam Valve				*		
	2/3 Steam Valve				*		
	HP-1 S/S			*			
	HP-1 Status	*					
	HP-1 Speed				*		
	HP-1 VSD Alarm	*					
	HP-2 S/S			*			
	HP-2 Status	*					
	HP-2 Speed				*		
	HP-2 VSD Alarm	*					
	HW Supply Temp		*				
	HW Return Temp		*				
	Steam Pressure		*				
	HW Remote DPT		*				

LOGIC VARIABLES

BINARY	ANALOG	DESCRIPTION
Sysgo		ON WHEN HEATING SYSTEM IS ENABLED
PxPF		ON WHEN PUMP x STATUS IS PROVEN
PxFL		ON WHEN PUMP x PROOF HAS FAILED
FLOW		ON WHEN EITHER PUMP IS PROVEN
Px		ON WHEN PUMP x IS COMMANDED TO RUN
	OAT	VARIABLE VALUE OF OUTDOOR AIR TEMPERATURE
	PxRT	VARIABLE VALUE OF PUMP x RUNTIME (HH:MM)
	HWSP	VARIABLE CALCULATED VALUE OF HOT WATER SUPPLY TEMPERATURE SETPOINT
	HWS	VARIABLE VALUE OF HOT WATER SUPPLY TEMPERATURE
LoStP		ON WHEN CAMPUS STEAM PRESSURE IS LOW

ELECTRIC LADDER DIAGRAMS

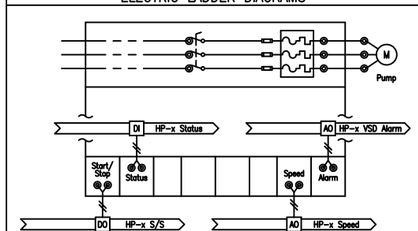

TYPICAL PUMP VSD

REVISIONS

NO.	DESCRIPTION	DATE

THE UNIVERSITY of NORTH CAROLINA at CHAPEL HILL

The University of North Carolina
Chapel Hill, North Carolina

Standard Control Drawings

Eng	RR
Drawn	HJN
Chkd	---
Appd	---
Issued	
Job No.	----
Scale	N/A
Proj Code	

REV 2021

STEAM TO HW CONVERTER WITH VV PUMPS

00 OF 00
SHEET NUMBER

C-3.01
DWG NUMBER

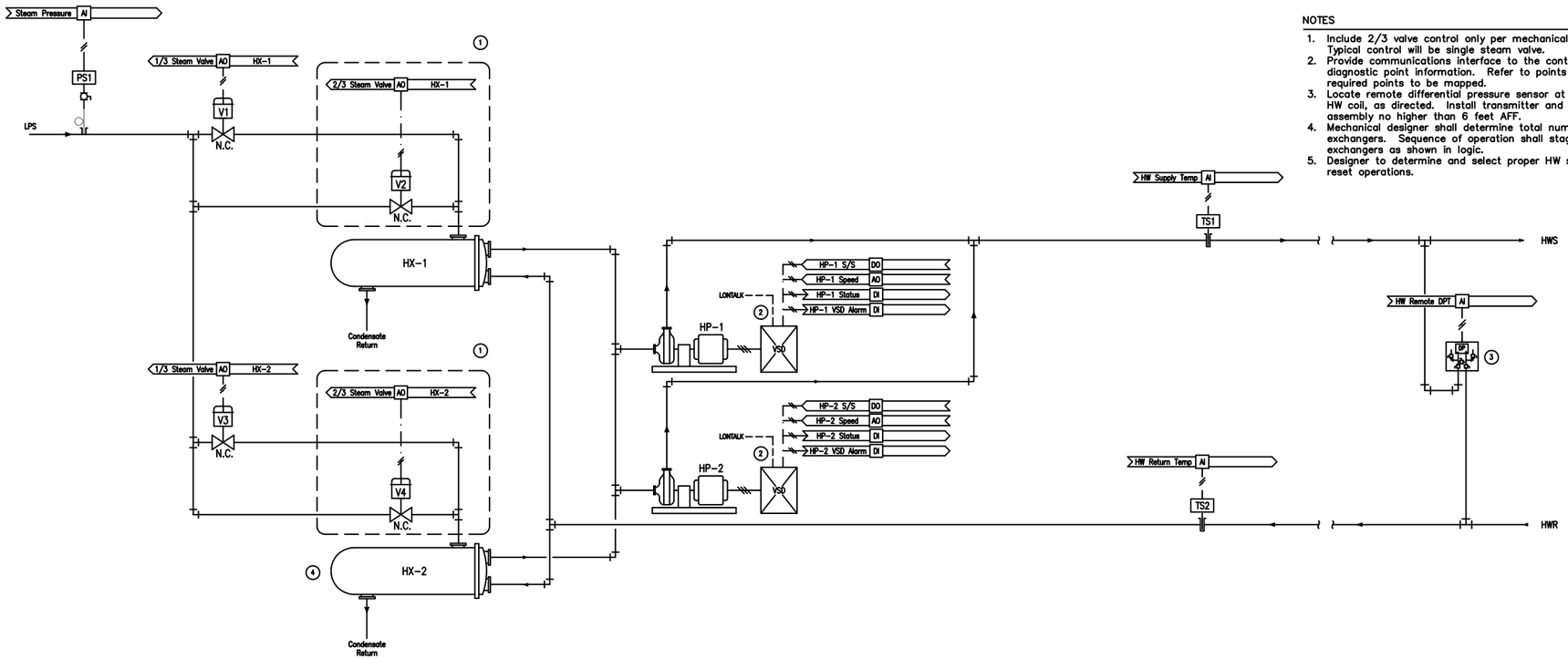

NOTES

1. Include 2/3 valve control only per mechanical design. Typical control will be single steam valve.
2. Provide communications interface to the control system for diagnostic point information. Refer to points list for required points to be mapped.
3. Locate remote differential pressure sensor at most remote HW coil, as directed. Install transmitter and bypass assembly no higher than 6 feet AFF.
4. Mechanical designer shall determine total number of heat exchangers. Sequence of operation shall stage through exchangers as shown in logic.
5. Designer to determine and select proper HW set points for reset operations.

STEAM TO HW CONVERTER WITH VV PUMPS

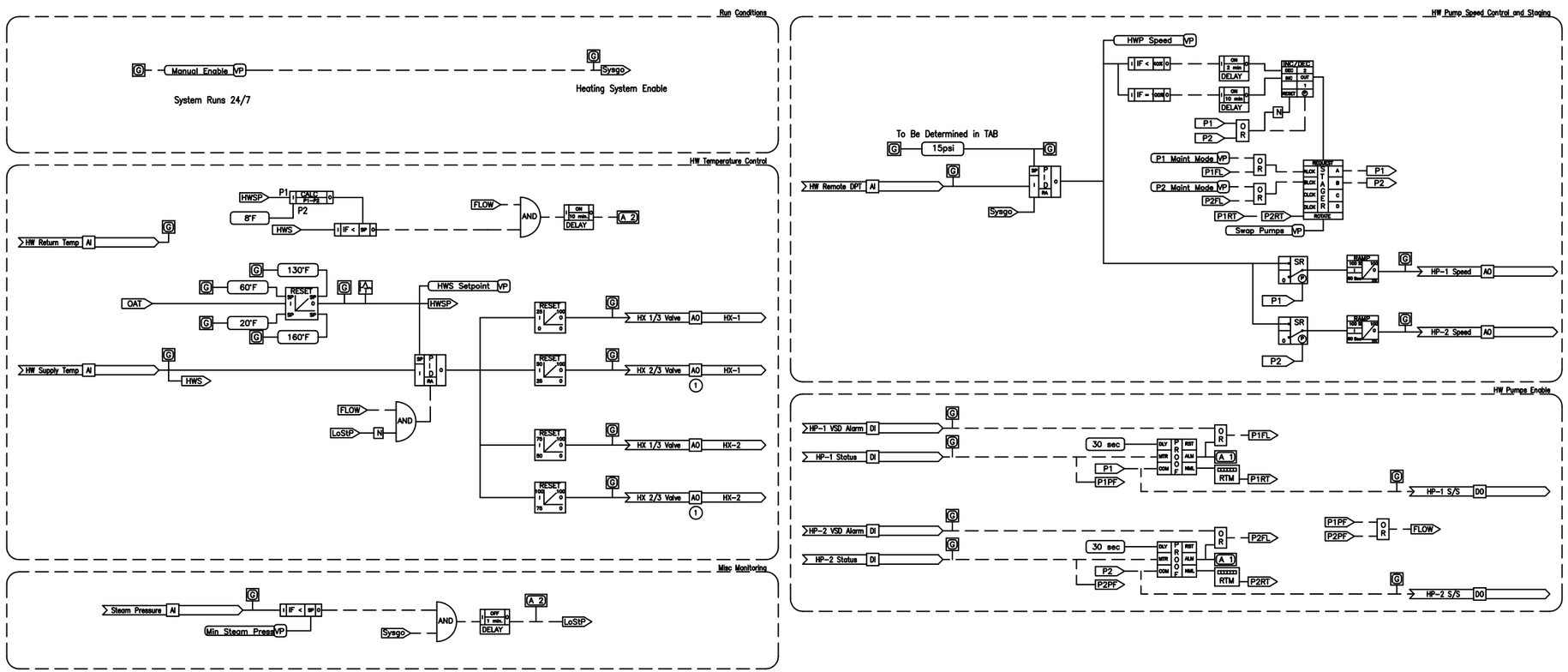

Software Logic Diagram

POINTS LIST

ADDRESS	POINT DESCRIPTOR	DI	AI	DO	AO	VP	REMARKS
	1/3 Steam Valve				*		one per HX
	2/3 Steam Valve				*		one per HX; See Note 1
	HP-1 S/S			*			
	HP-1 Status	*					
	HP-1 Speed				*		
	HP-1 VSD Alarm	*					
	HP-2 S/S			*			
	HP-2 Status	*					
	HP-2 Speed				*		
	HP-2 VSD Alarm	*					
	HW Supply Temp		*				
	HW Return Temp		*				
	Steam Pressure		*				
	HW Remote DPT		*				

LOGIC VARIABLES

BINARY	ANALOG	DESCRIPTION
Sysgo		ON WHEN HEATING SYSTEM IS ENABLED
PxPF		ON WHEN PUMP x STATUS IS PROVEN
PxFL		ON WHEN PUMP x PROOF HAS FAILED
FLOW		ON WHEN EITHER PUMP IS PROVEN
Px		ON WHEN PUMP x IS COMMANDED TO RUN
	OAT	VARIABLE VALUE OF OUTDOOR AIR TEMPERATURE
	PxRT	VARIABLE VALUE OF PUMP x RUNTIME (HH:MM)
	HWSP	VARIABLE CALCULATED VALUE OF HOT WATER SUPPLY TEMPERATURE SETPOINT
	HWS	VARIABLE VALUE OF HOT WATER SUPPLY TEMPERATURE
LoStP		ON WHEN CAMPUS STEAM PRESSURE IS LOW

ELECTRIC LADDER DIAGRAMS

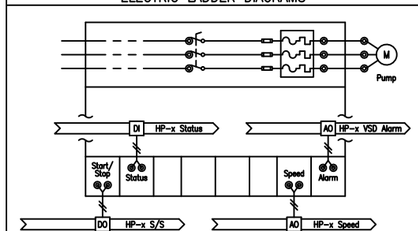

TYPICAL PUMP VSD

REVISIONS

NO.	DESCRIPTION	DATE

THE UNIVERSITY of NORTH CAROLINA at CHAPEL HILL

The University of North Carolina
Chapel Hill, North Carolina

Standard Control Drawings

Eng	RR
Drawn	HJN
Chkd	---
Appd	---
Issued	
Job No.	----
Scale	N/A
Proj Code	

REV 2021

STEAM TO HW CONVERTER WITH VV PUMPS

00 OF 00
SHEET NUMBER

C-3.01
DWG NUMBER

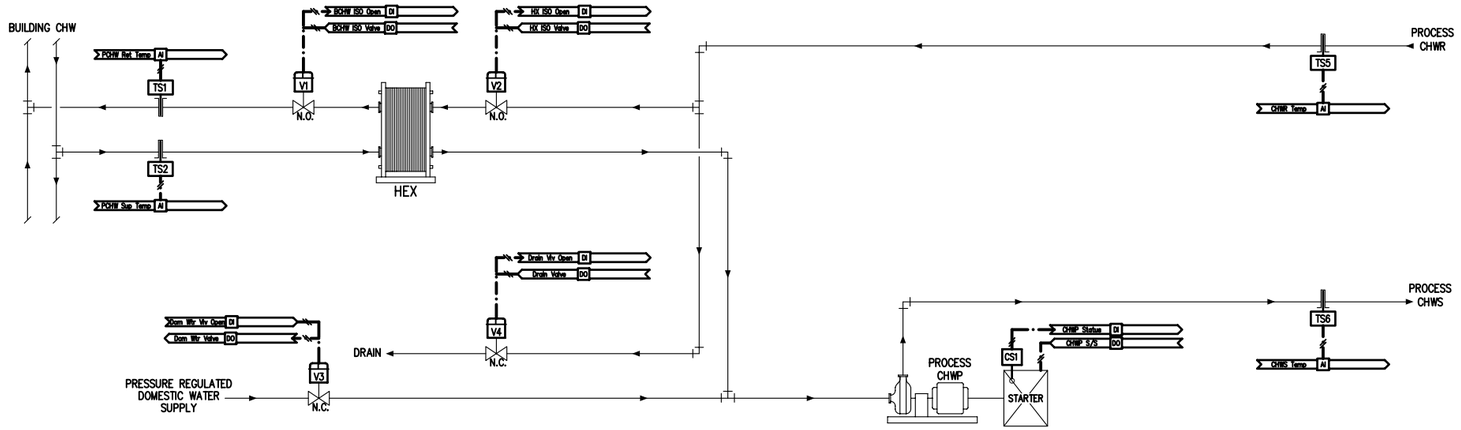

PROCESS CHILLED WATER LOOP

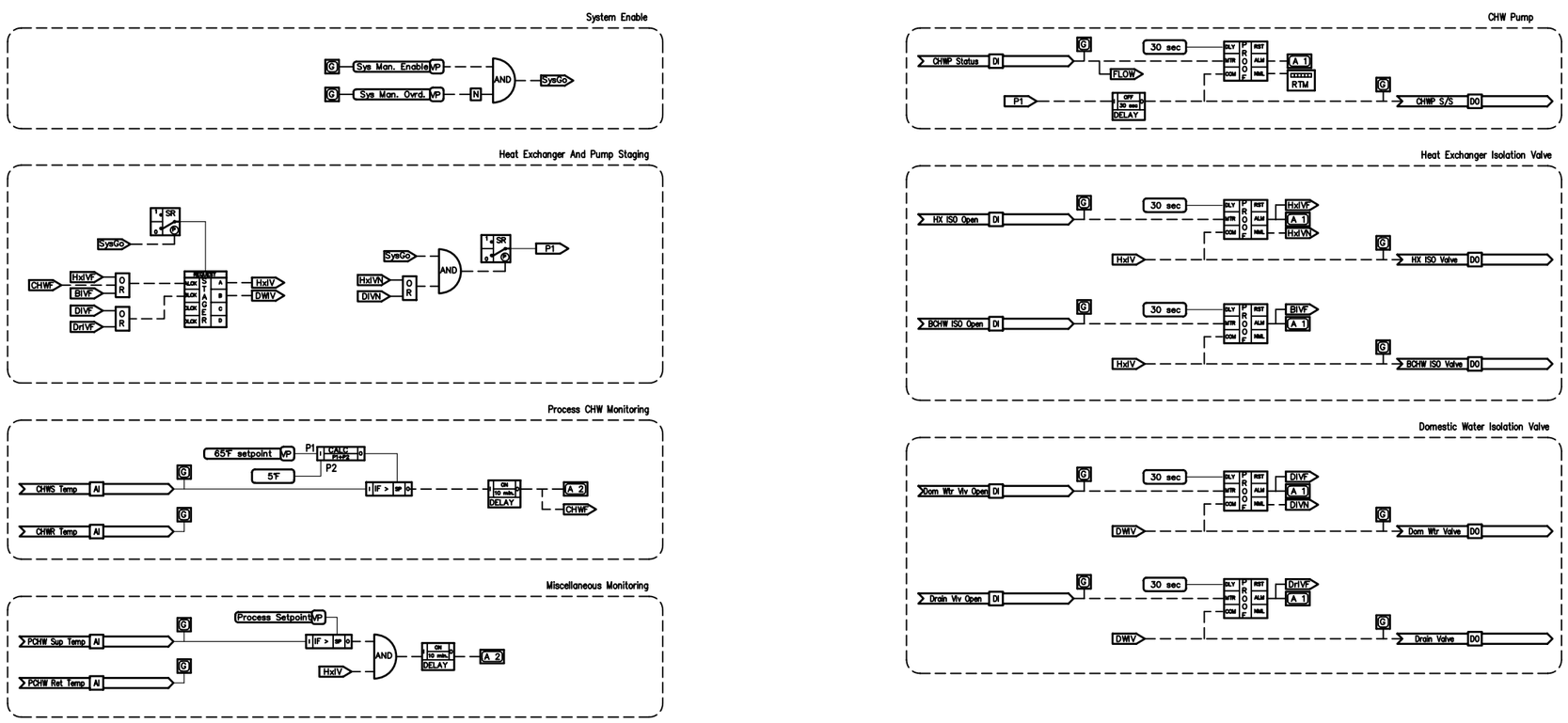

Software Logic Diagram

POINTS LIST

ADDRESS	POINT DESCRIPTOR	POINT TYPE DI	AI	DO	AO	VP	REMARKS
	CHWP-1 S/S			•			
	CHWP-1 Status	•					
	CHWP-2 S/S			•			
	CHWP-2 Status	•					
	CHWS Temp		•				
	CHWR Temp		•				
	BCHW ISO Valve			•			
	BCHW ISO Open	•					
	HX ISO Valve			•			
	HX ISO Open	•					
	Drain Valve			•			
	Drain Viv Open	•					
	PCHW Ret Temp		•				
	PCHW Sup Temp		•				
	Drain Temp		•				
	Dom Sup Temp		•				
	Dom Wtr Valve			•			
	Dom Wtr Viv Open	•					

LOGIC VARIABLES

BINARY	ANALOG	DESCRIPTION
Sysgo		ON WHEN COOLING SYSTEM IS ENABLED
FLOW		ON WHEN PUMP IS PROVEN
P1		ON WHEN PUMP IS COMMANDED TO RUN
HxIV		ON WHEN HEAT EXCHANGER ISOLATION VALVE IS COMMANDED OPEN
DWIV		ON WHEN DOMESTIC WATER ISOLATION VALVE IS COMMANDED OPEN
HxIVN		ON WHEN HEAT EXCHANGER ISOLATION VALVE NORMAL POSITOIN PROVEN
HxIVF		ON WHEN HEAT EXCHANGER ISOLATION VALVE PROOF FAILS
BIVF		ON WHEN BUILDING CHW ISOLATION VALVE PROOF FAILS
DIVN		ON WHEN DOMESTIC WATER ISOLATION VALVE NORMAL POSITOIN PROVEN
DIVF		ON WHEN DOMESTIC WATER ISOLATION VALVE PROOF FAILS
CHWF		ON WHEN CHWS TEMPERATURE IS ABOVE CALCULATED SETPOINT
DrIVF		ON WHEN DRAIN WATER ISOLATION VALVE PROOF FAILS

ELECTRIC LADDER DIAGRAMS

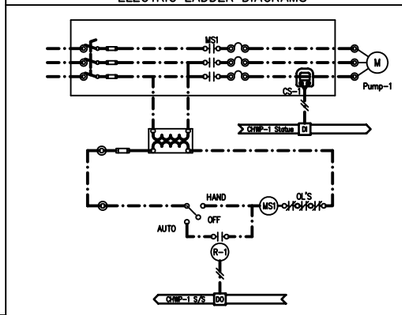

REVISIONS

NO.	DESCRIPTION	DATE

THE UNIVERSITY of NORTH CAROLINA at CHAPEL HILL

The University of North Carolina
Chapel Hill, North Carolina

Standard Control Drawings

Eng	HJN
Drawn	HJN
Chkd	---
Appd	---
Issued	12/23/2008
Job No.	----
Scale	N/A
Proj Code	

100% Design Review (REV 3)

PROCESS CHILLED WATER LOOP

00 OF 00
SHEET NUMBER

C-3.02

DWG NUMBER

NOTES

1. Heat recovery coils are referenced in other Standard Control Drawing schematics and shown on those drawings for location purposes only.
2. Optional freeze protection bypass valve.

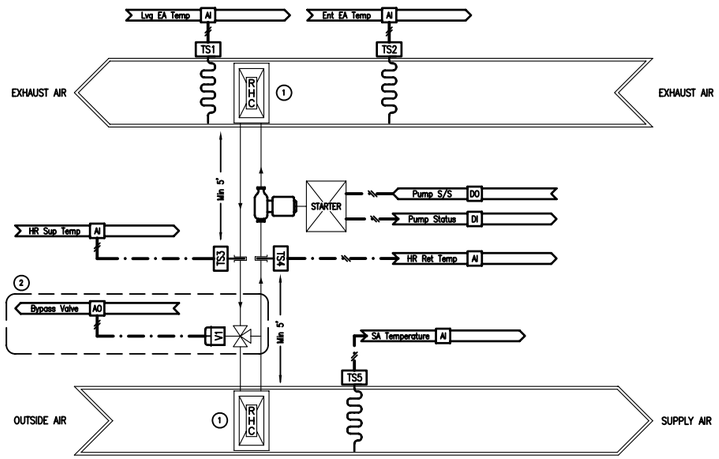

GLYCOL HEAT RECOVERY RUN AROUND LOOP

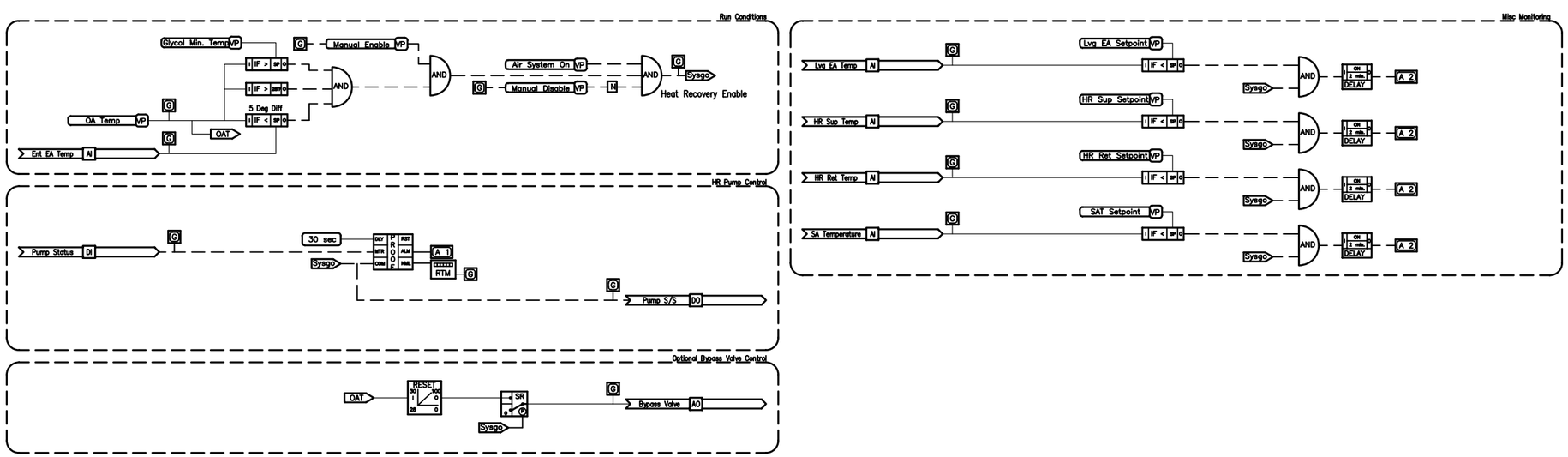

Software Logic Diagram

POINTS LIST

ADDRESS	POINT DESCRIPTOR	POINT TYPE DI	AI	DO	AO	VP	REMARKS
	Pump S/S			•			
	Pump Status	•					
	Lvg EA Temp		•				
	Ent EA Temp		•				
	HR Sup Temp		•				
	HR Ret Temp		•				
	SA Temperature		•				
	Bypass Valve				•		See Note 2

LOGIC VARIABLES

BINARY	ANALOG	DESCRIPTION
Sysgo		ON WHEN SYSTEM IS ENABLED
	OAT	VARIABLE VALUE OF OUTDOOR AIR TEMPERATURE

ELECTRIC LADDER DIAGRAMS

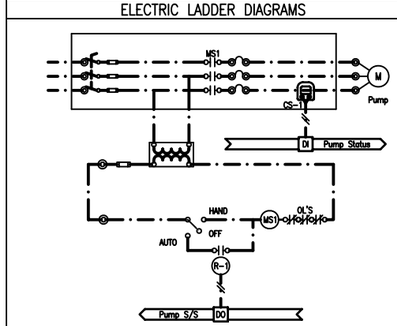

Pump Starter

REVISIONS

NO.	DESCRIPTION	DATE

The University of North Carolina
Chapel Hill, North Carolina

Standard Control Drawings

Eng	HJN
Drawn	HJN
Chkd	---
Appd	---
Issued	12/23/2008
Job No.	----
Scale	N/A
Proj Code	

100% Design Review (REV 3)

GLYCOL HEAT RECOVERY RUN AROUND LOOP

00 OF 00
SHEET NUMBER

C-3.03

DWG NUMBER

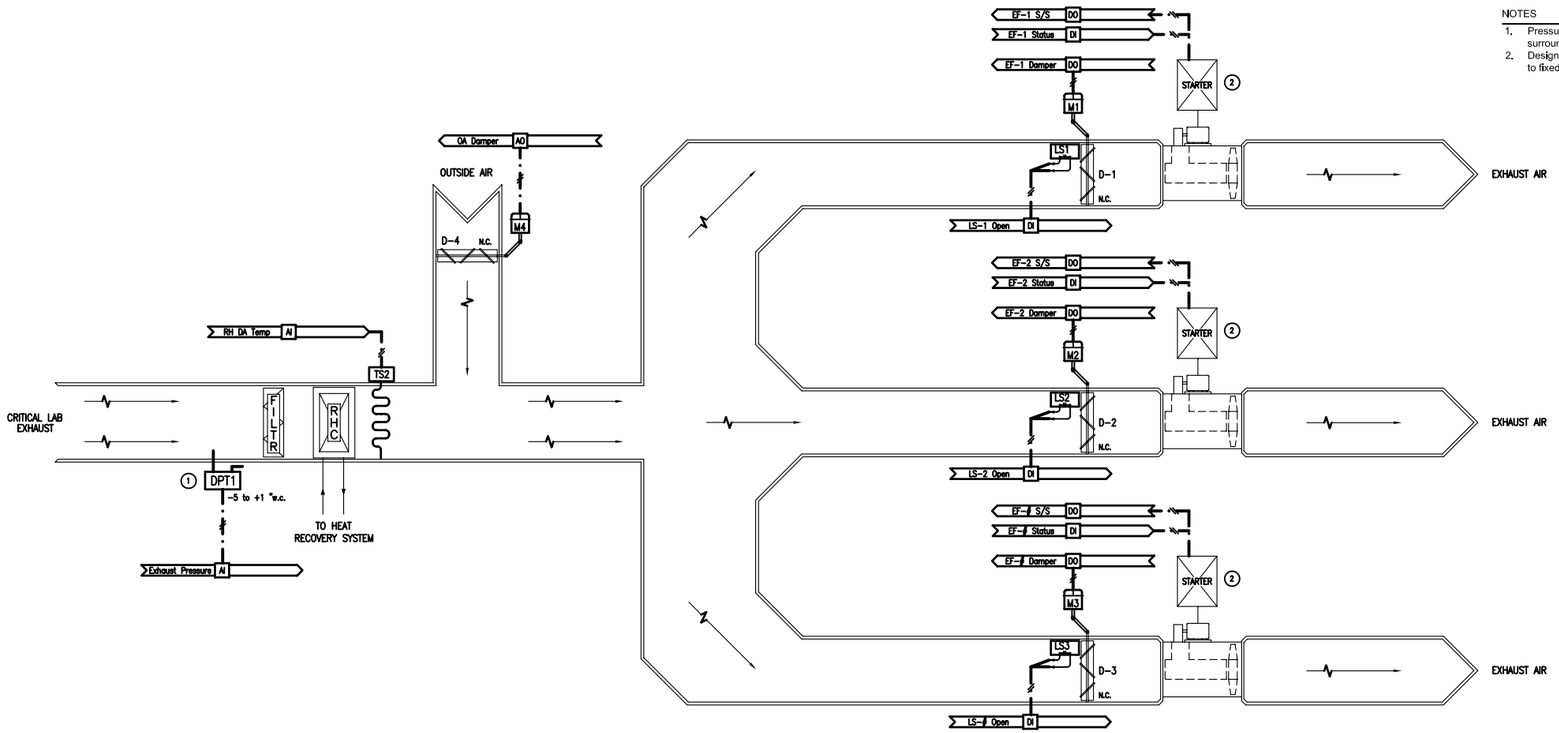

NOTES

1. Pressure monitoring relative to the less hazardous space surrounding the critical area served.
2. Designer may use VFD's for balancing and soft start of fans to fixed speed.

REDUNDANT CV EXHAUST FAN CONTROL FOR MANIFOLD EXHAUST LAB SYSTEMS

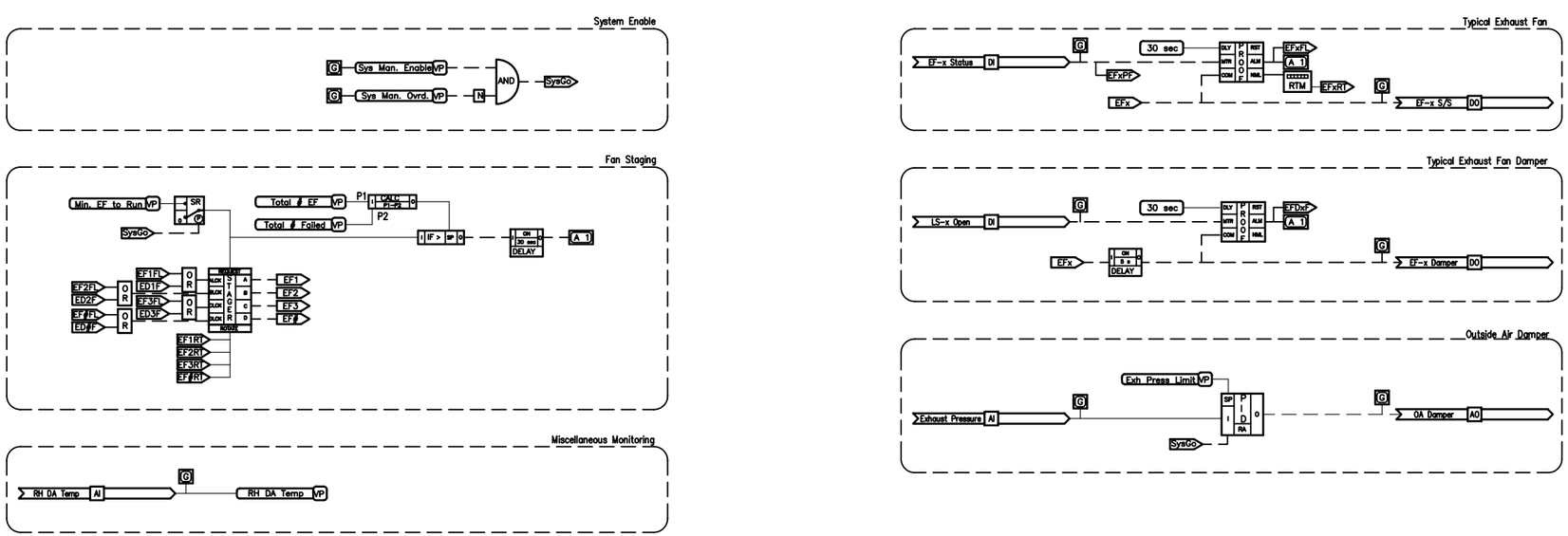

Software Logic Diagram

POINTS LIST

ADDRESS	POINT DESCRIPTOR	POINT TYPE DI	AI	DO	AO	VP	REMARKS
	EF-1 S/S			*			
	EF-1 Status	*					
	EF-2 S/S			*			
	EF-2 Status	*					
	EF-# S/S			#			
	EF-# Status	#					
	EF-1 Damper			*			
	LS-1 Open	*					
	EF-2 Damper			*			
	LS-2 Open	*					
	EF-# Damper			#			
	LS-# Open	#					
	OA Damper				*		
	Exhaust Pressure		*				
	RH DA Temp		*				

LOGIC VARIABLES

BINARY	ANALOG	DESCRIPTION
SysgO		ON WHEN COOLING SYSTEM IS ENABLED
EFxPF		ON WHEN EXHAUST FAN x STATUS IS PROVEN
EFxFL		ON WHEN EXHAUST FAN x PROOF HAS FAILED
EFx		ON WHEN EXHAUST FAN x IS COMMANDED TO RUN
EFDxF		ON WHEN EXHAUST FAN DAMPER x PROOF HAS FAILED
	EFxRT	VARIABLE VALUE OF EXHAUST FAN x RUNTIME (HH:MM)

ELECTRIC LADDER DIAGRAMS

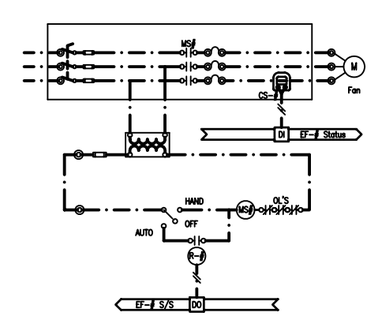

EXHAUST FAN STARTER (TYPICAL FOR ALL EXHAUST FANS)

REVISIONS

NO.	DESCRIPTION	DATE

THE UNIVERSITY of NORTH CAROLINA at CHAPEL HILL

The University of North Carolina
Chapel Hill, North Carolina

Standard Control Drawings

Eng	HJN
Drawn	HJN
Chkd	---
Appd	---
Issued	12/23/2008
Job No.	----
Scale	N/A
Proj Code	

100% Design Review (REV 3)

REDUNDANT CV EXHAUST FAN CONTROL FOR MANIFOLD EXHAUST LAB SYSTEMS

00 OF 00
SHEET NUMBER

C-4.00
DWG NUMBER

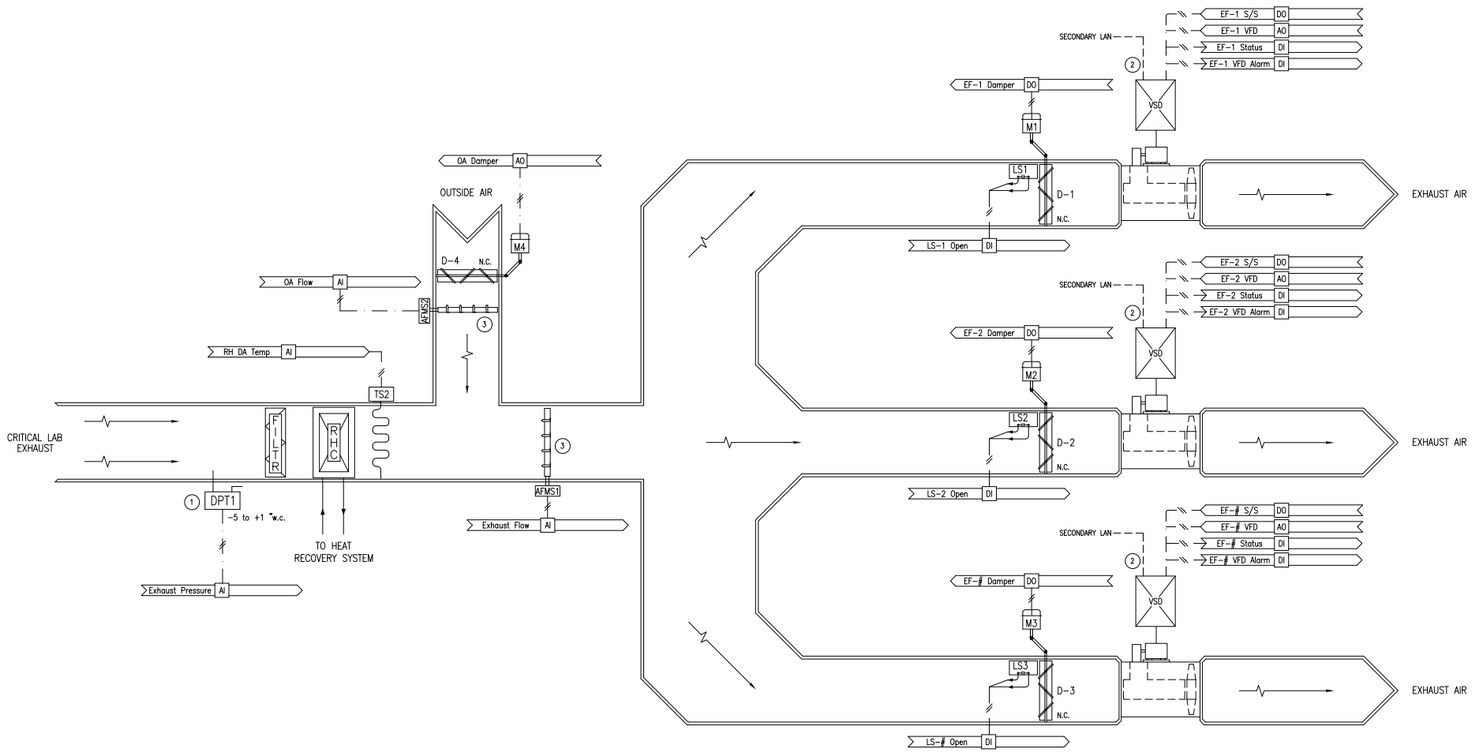

NOTES

1. Pressure monitoring relative to the less hazardous space surrounding the critical area served.
2. Provide communication interface to the control system for diagnostic point information. Refer to points list for required points to be mapped.
3. Coordinate with mechanical design to ensure adequate straight lengths of duct and proper range on the sensor.

POINTS LIST

ADDRESS	POINT DESCRIPTOR	POINT TYPE DI	AI	DO	AO	VP	REMARKS
	EF-1 S/S			•			
	EF-1 Status	•					
	EF-1 VFD				•		
	EF-1 VFD Alarm	•					
	EF-2 S/S			•			
	EF-2 Status	•					
	EF-2 VFD				•		
	EF-2 VFD Alarm	•					
	EF-# S/S			#			
	EF-# Status	#					
	EF-# VFD				•		
	EF-# VFD Alarm	•					
	EF-1 Damper			•			
	LS-1 Open	•					
	EF-2 Damper			•			
	LS-2 Open	•					
	EF-# Damper			#			
	LS-# Open	#					
	OA Damper				•		
	Exhaust Pressure		•				
	RH DA Temp		•				
	OA Flow		•				
	Exhaust Flow		•				

LOGIC VARIABLES

BINARY	ANALOG	DESCRIPTION
Sysgo		ON WHEN COOLING SYSTEM IS ENABLED
EFxPF		ON WHEN EXHAUST FAN x STATUS IS PROVEN
EFxFL		ON WHEN EXHAUST FAN x PROOF HAS FAILED
EFx		ON WHEN EXHAUST FAN x IS COMMANDED TO RUN
EFDxF		ON WHEN EXHAUST FAN DAMPER x PROOF HAS FAILED
LSxO		ON WHEN EXHAUST FAN DAMPER x LIMIT SWITCH PROVEN
	EFxRT	VARIABLE VALUE OF EXHAUST FAN x RUNTIME (HH:MM)
	EFlow	VARIABLE CALCULATED VALUE OF EXHAUST FLOW (CFM)

REVISIONS

NO.	DESCRIPTION	DATE

REDUNDANT VAV EXHAUST FAN CONTROL FOR MANIFOLD EXHAUST LAB SYSTEMS

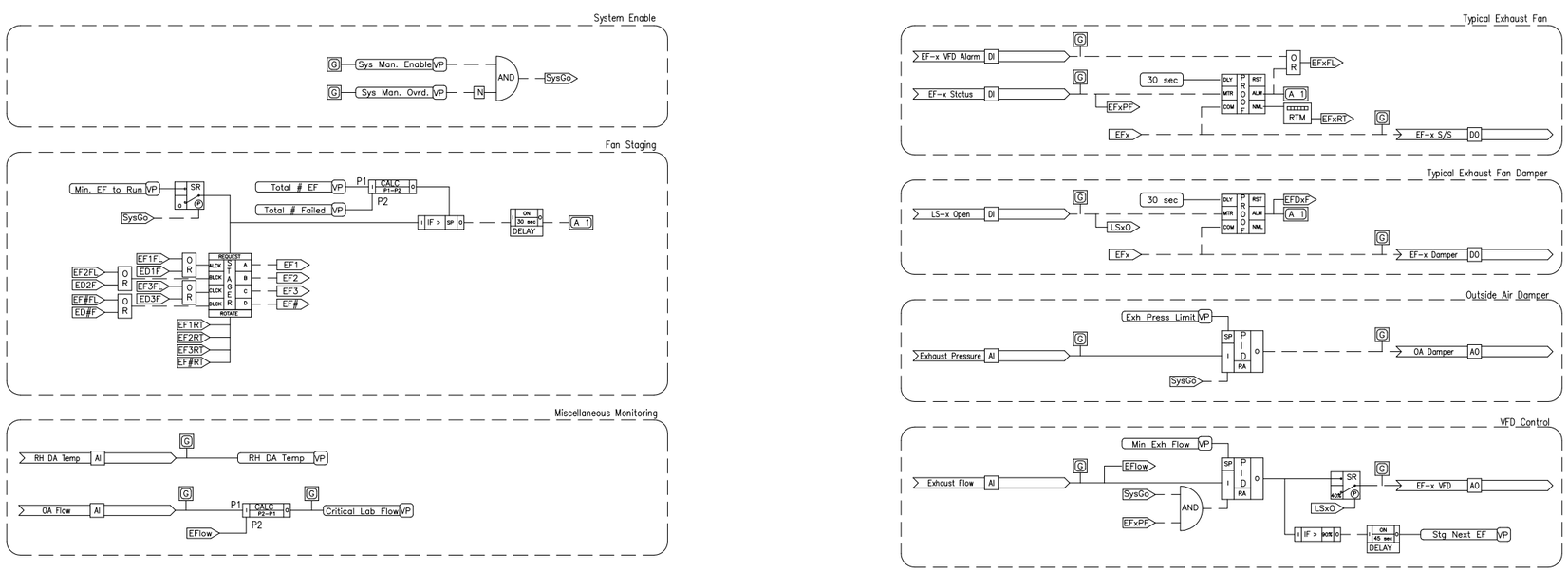

Software Logic Diagram

ELECTRIC LADDER DIAGRAMS

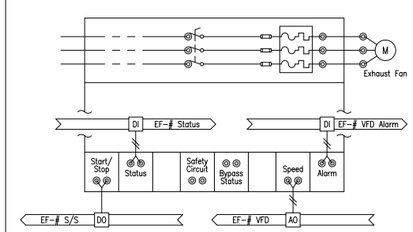

EXHAUST FAN VSD (TYPICAL FOR ALL EXHAUST FANS)

THE UNIVERSITY of NORTH CAROLINA at CHAPEL HILL

The University of North Carolina
Chapel Hill, North Carolina

Standard Control Drawings

Eng	HJN
Drawn	HJN
Chkd	---
Appd	---
Issued	
Job No.	---
Scale	N/A
Proj Code	

Xref

100% Design Review (REV 3)

REDUNDANT VAV EXHAUST FAN CONTROL FOR MANIFOLD EXHAUST LAB SYSTEMS

00 OF 00
SHEET NUMBER

C-4.01
DWG NUMBER

NOTES

1. Where pre-approved by owner provide either the PH Coil DAT or HWS Temp sensor.
2. Physical configuration of FCU to be determined by designer including fan draw or blow.

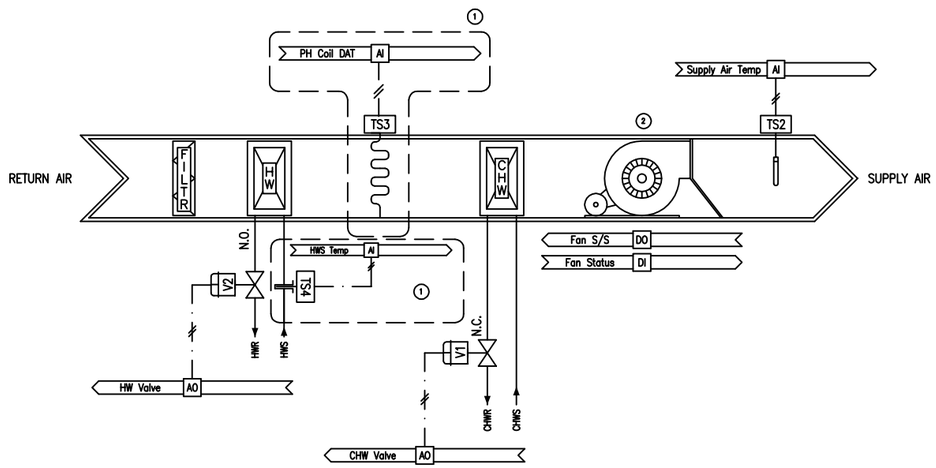

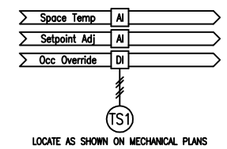

LOCATE AS SHOWN ON MECHANICAL PLANS

POINTS LIST

ADDRESS	POINT DESCRIPTOR	POINT TYPE DI	AI	DO	AO	VP	REMARKS
	Space Temp		•				
	Setpoint Adj		•				
	Occ Override	•					
	CHW Valve				•		
	Supply Air Temp		•				
	HW Valve				•		
	Fan S/S			•			
	Fan Status	•					
	PH Coil DAT		•				See Note 1
	HWS Temp		•				See Note 1

LOGIC VARIABLES

BINARY	ANALOG	DESCRIPTION
Occ		ON WHEN OCCUPIED MODE ACTIVE
SBH		ON WHEN SETBACK HEATING MODE ACTIVE
SBC		ON WHEN SETBACK COOLING MODE ACTIVE
	Temp	VARIABLE VALUE OF SPACE TEMPERATURE

REVISIONS

NO.	DESCRIPTION	DATE

FAN COIL UNITS

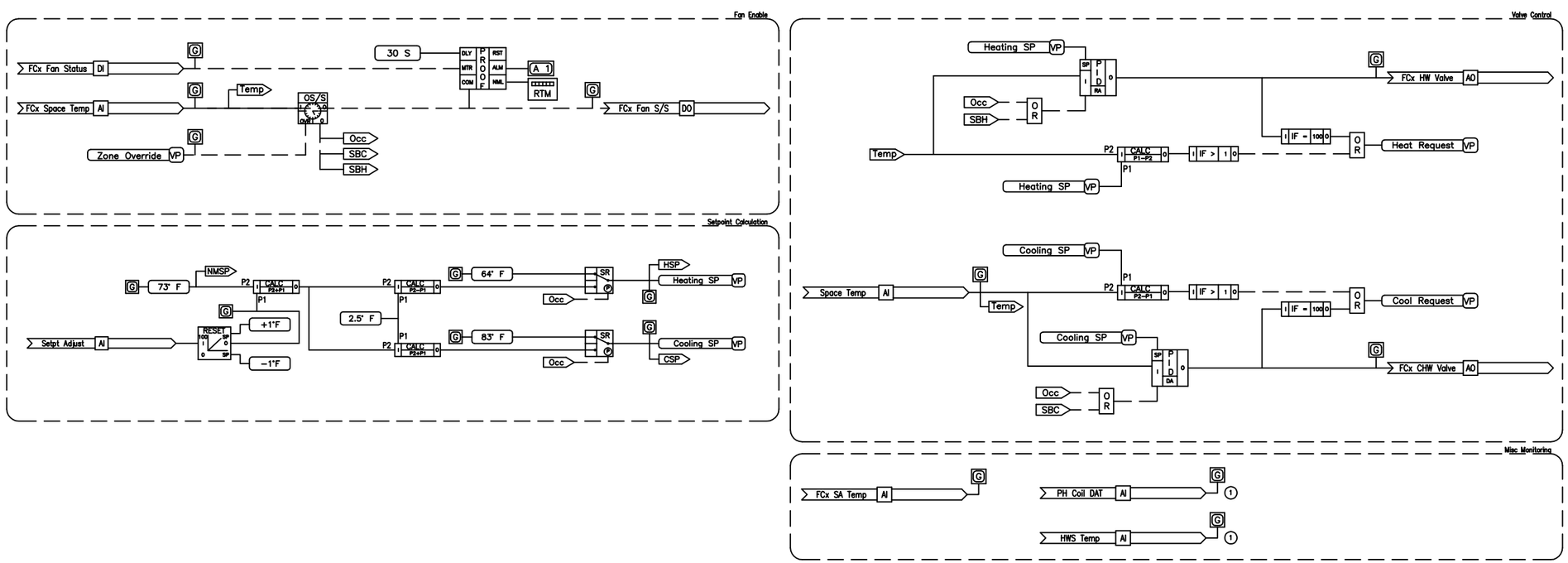

Software Logic Diagram

ELECTRIC LADDER DIAGRAM

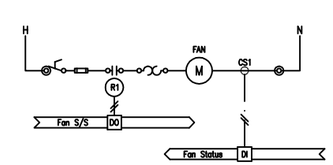

THE UNIVERSITY of NORTH CAROLINA at CHAPEL HILL

The University of North Carolina
Chapel Hill, North Carolina

Standard Control Drawings

Eng	RR
Drawn	RR
Chkd	---
Appd	---
Issued	
Job No.	----
Scale	N/A
Proj Code	

REV 2014

FAN COIL UNITS

00 OF 00
SHEET NUMBER

C-4.02

DWG NUMBER

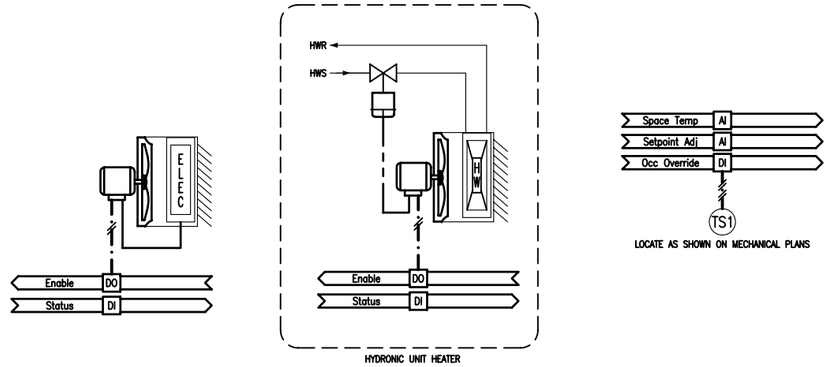

ELECTRIC (OR HYDRONIC) UNIT HEATER

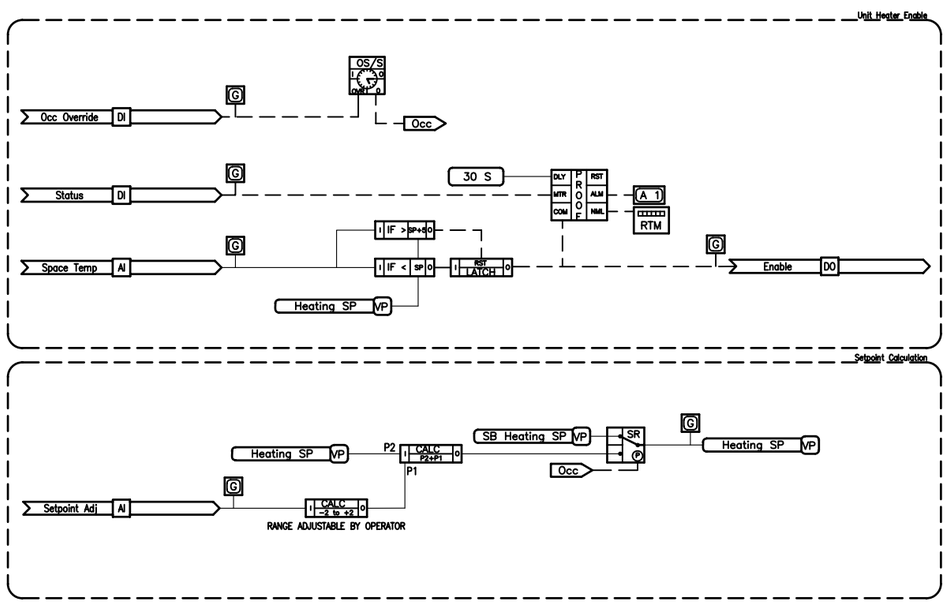

Software Logic Diagram

POINTS LIST

ADDRESS	POINT DESCRIPTOR	POINT TYPE DI	AI	DO	AO	VP	REMARKS
	Space Temp		•				
	Setpoint Adj		•				
	Occ Override	•					
	Enable			•			
	Status	•					

LOGIC VARIABLES

BINARY	ANALOG	DESCRIPTION
Occ		ON WHEN OCCUPIED MODE ACTIVE

ELECTRIC LADDER DIAGRAM

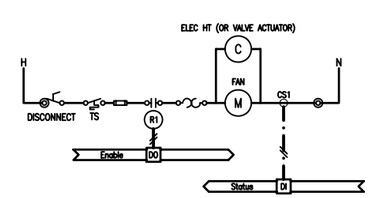

REVISIONS

NO.	DESCRIPTION	DATE

The University of North Carolina
Chapel Hill, North Carolina

Standard Control Drawings

Eng	HJN
Drawn	HJN
Chkd	---
Appd	---
Issued	12/23/2008
Job No.	----
Scale	N/A
Proj. Code	

100% Design Review (REV 3)

ELECTRIC (OR HYDRONIC) UNIT HEATER

00 OF 00
SHEET NUMBER

C-4.03
DWG NUMBER

NOTES

1. Large volume EP required to allow pneumatic actuators to open in less than 10 seconds.
2. Quantity and size of pneumatic actuators to meet mechanical damper design requirements with maximum full stroke time of 10 seconds.
3. EP controlled directly from generator factory control panel.

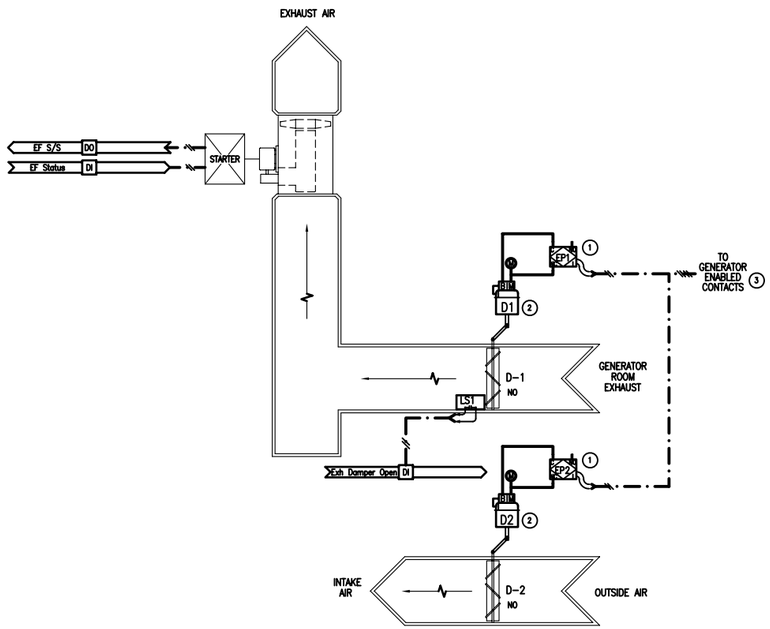

GENERATOR ROOM EXHAUST CONTROL

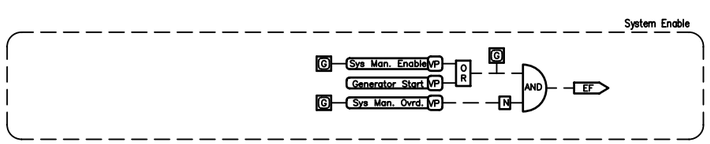

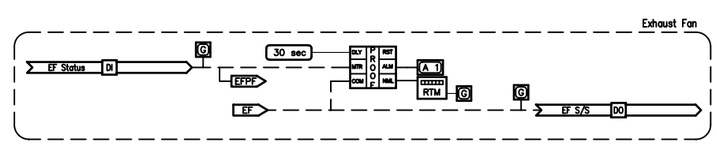

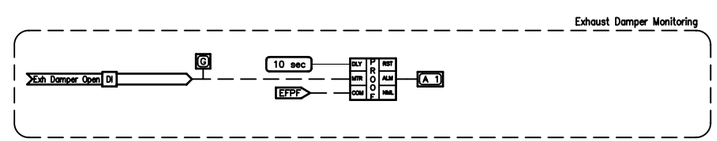

Software Logic Diagram

POINTS LIST

ADDRESS	POINT DESCRIPTOR	POINT TYPE DI	AI	DO	AO	VP	REMARKS
	EF S/S			*			
	EF Status	*					
	Exh Damper Open	*					

LOGIC VARIABLES

BINARY	ANALOG	DESCRIPTION
EFPF		ON WHEN EXHAUST FAN STATUS IS PROVEN
EF		ON WHEN EXHAUST FAN IS COMMANDED TO RUN

ELECTRIC LADDER DIAGRAMS

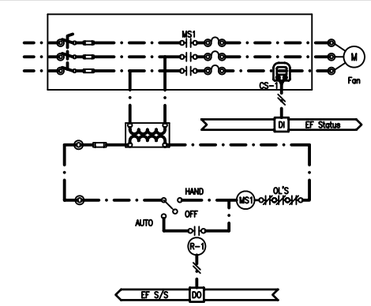

EXHAUST FAN STARTER

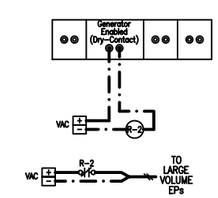

GENERATOR CONTROL PANEL

REVISIONS

NO.	DESCRIPTION	DATE

THE UNIVERSITY of NORTH CAROLINA at CHAPEL HILL

The University of North Carolina
Chapel Hill, North Carolina

Standard Control Drawings

Eng	HJN
Drawn	HJN
Chkd	---
Appd	---
Issued	12/23/2008
Job No.	----
Scale	N/A
Proj Code	

100% Design Review (REV 3)

GENERATOR ROOM EXHAUST CONTROL

00 OF 00
SHEET NUMBER

C-4.04

DWG NUMBER

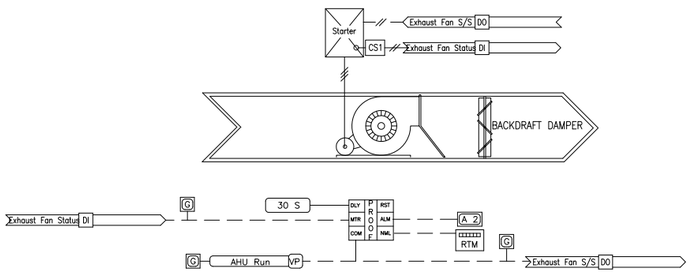

POINTS LIST							
ADDRESS	POINT DESCRIPTOR	POINT TYPE DI	AI	DO	AO	VP	REMARKS
	Exhaust Fan S/S			•			
	Exhaust Fan Status	•					
	AHU Run					•	

Typical Small Exhaust Fan

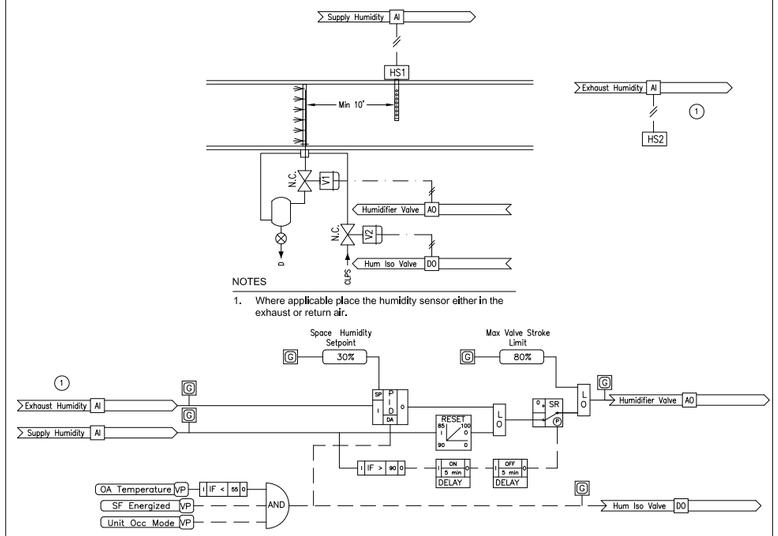

NOTES

1. Where applicable place the humidity sensor either in the exhaust or return air.

POINTS LIST							
ADDRESS	POINT DESCRIPTOR	POINT TYPE DI	AI	DO	AO	VP	REMARKS
	Exhaust Humidity		•			•	See Note 1
	Supply Humidity		•				
	Humidifier Valve				•		
	Hum Iso Valve			•			
	Outside Air Temp					•	
	Sup Fan Energized					•	
	Unit Occupied Mode					•	

Typical Steam Humidifier

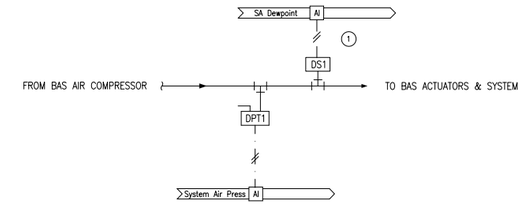

NOTES

1. Dewpoint sensor required on laboratory and research buildings only.

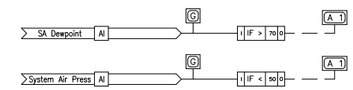

POINTS LIST							
ADDRESS	POINT DESCRIPTOR	POINT TYPE DI	AI	DO	AO	VP	REMARKS
	SA Dewpoint		•				
	System Air Press		•				

BAS Air Compressor Monitoring

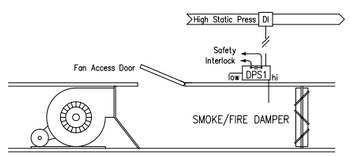

NOTES

1. Where applicable per mechanical design.

POINTS LIST							
ADDRESS	POINT DESCRIPTOR	POINT TYPE DI	AI	DO	AO	VP	REMARKS
	High Static Press	•					
	Unit Shutdown					•	

Typical Smoke/Fire Damper Safety

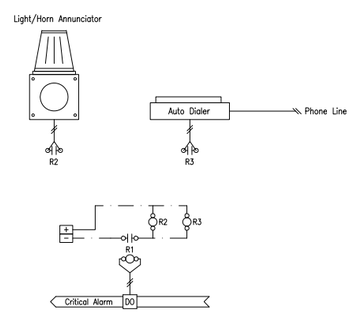

NOTES

1. Dialer provided by UNC.
2. See mechanical drawings for location (s)

POINTS LIST							
ADDRESS	POINT DESCRIPTOR	POINT TYPE DI	AI	DO	AO	VP	REMARKS
	Critical Alarm						

Local Alarm Annunciator

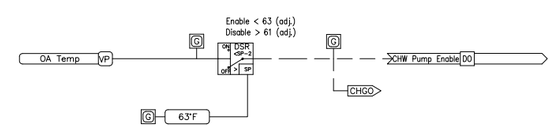

POINTS LIST							
ADDRESS	POINT DESCRIPTOR	POINT TYPE DI	AI	DO	AO	VP	REMARKS
	OA Temp					•	
	CHW Pump Enable			•			

LOGIC VARIABLES		
BINARY	ANALOG	DESCRIPTION
CWGO		ON WHEN CHILLED WATER SYSTEM PUMP IS ENABLED

Chilled Water System Pump Enable

REVISIONS

NO.	DESCRIPTION	DATE

THE UNIVERSITY of NORTH CAROLINA at CHAPEL HILL

The University of North Carolina
Chapel Hill, North Carolina

Standard Control Drawings

Eng	RR
Drawn	HJN
Chkd	---
Appd	---
Issued	
Job No.	----
Scale	N/A
Proj Code	

(Rev 2014)

MISCELLANEOUS CONTROLS

00 OF 00
SHEET NUMBER

C-4.05

DWG NUMBER